HOMEOWNER'S BUILDING
Permit Manual



Development Services Department
(480) 782-3000

Table of Contents

Introduction 2

How to Obtain a Building Permit 3

Inspection Scheduling 5

Work Exempt from Permit 7

Contacts 9

Plot Plan 10

Carport to Garage Conversion 11

Fences and Walls 13

Landscaping 14

Electrical and Gas Permits 15

Patio Covers 17

Storage Sheds/ Open-Air Ramadas/ Detached Buildings/Chicken Coop's/ ADU's 22

Arizona Rooms 34

Remodeling 34

Roofing 34

Stucco 34

Fireplaces 36

Room Additions/Accessory Dwelling Units 37

Swimming Pools and Spas 44

Pool Barrier Guidelines 45

List of Required Inspections 44

Appendix - A – 50/ B – 52 / C- 54

Introduction

This manual is designed for the Chandler homeowner. It is intended to:

- Identify work that requires a permit.
- Provide information concerning the requirements for obtaining a building permit, submitting plans and scheduling inspections.
- Provide examples of plans and details that will aid in project completion and code compliance.
- Inform homeowners of the requirements that must be met by them or contractors depending on who is performing the work.
- Answer some of the most commonly asked building code and compliance questions.
- All references are to the International Residential Code or Chandler City code unless noted otherwise. Chandler City Code can be found at: http://www.municode.com/Library/AZ/Chandler. Copies of the International Construction Code Series are available at the City Clerk's office and at https://codes.iccsafe.org/public/collections/I-Codes

It is the responsibility of the homeowner to locate the property lines and to contact the Arizona Blue Stake Center with a request to have all underground utilities located. The Arizona Blue Stake Center can be reached at (602) 263-1100, (800) 782-5348 or 811. You need to call at least two days before you dig.

Please Note:

If the home is in a subdivision with a homeowners' association, the plans should be approved by the association *before* applying to the city for a building permit. The City does not enforce HOA regulations. You are responsible to know and follow any HOA requirements or restrictions.

How to Obtain a Building Permit

The Development Services Construction Permit Counter is located at 215 East Buffalo Street in downtown Chandler.

Any construction requiring a permit also requires that a licensed contractor do the work unless the owner-applicant performs the work. It is the responsibility of the homeowner or the contractor to obtain a building permit. If you own a home that you lease or rent to others, a licensed contractor is required to obtain a permit. Reference Arizona Revised Statutes 32-1121A located on the Building Permit Application.

Application/Permitting/ Plan Review

To obtain a building permit and submit plans please visit:
https://www.chandleraz.gov/government/departments/development-services/building-safety-plan-review-permits-and-inspections

Instructions for applying for a permit and submitting plans can be found at the above website or you can contact us directly using the contacts found on page 8 of this manual. (Some, but not all, of the items required for submittal can be found below and may or may not apply to your project).

- Legal description(s) and parcel number(s).
- Plot (site) plan, which must show property lines, all buildings on the lot and dimensions from any new structures to related property lines. This information is available at the Maricopa County Assessor's website: https://mcassessor.maricopa.gov/index.php
- Structural details. Examples: footings, post to beam connections, truss calculations, mechanical fastener descriptions, or other material information.
- Mechanical, plumbing, electrical plans, etc. (if applicable).
- Floor plan and building elevations.

Fees

Building permit and plan check fees are charged according to the valuation of your project. The valuation is estimated based on the approximate cost to have a contractor do the job, including labor and materials. The City of Chandler Fee Schedule utilizes the ICC Building Valuation Data to determine the minimum value per square foot for newly constructed buildings. If the valuation you provide is less than the valuation in the fee schedule adopted by the City, your permit fees will be based upon the City Fee Schedule. All valuation adjustments are computed as part of the plan review process. The minimum permit fee is $60.00, based on a valuation of $500.00 or less, and the permit fee increases from this point. Please note:

- Plan review fees are due at the time you submit your plans.
- Any project under construction or completed without a permit may be charged a double permit fee.

Building Codes

The City of Chandler uses the following Codes, please check www.chandleraz.gov/building for the most current Editions:

- International Building Code (IBC)
- International Residential Code (IRC)
- International Plumbing Code (IPC)
- International Mechanical Code (IMC)
- International Fuel Gas Code (IFGC)
- National Electrical Code (NEC)
- International Energy Conservation Code (IECC)
- International Existing Building Code (IEBC)

Please also refer to the Chandler City Code, on the Web at:
http://www.municode.com/Library/AZ/Chandler

- Chapter 29: Building Safety Regulations Chapter 35: Land Use and Zoning

Inspection Scheduling

A list of inspections with their corresponding codes as well as inspection scheduling instructions, are included on the inspection card provided when the permit is issued.

INSTRUCTIONS FOR SCHEDULING INSPECTIONS ONLINE

1. Go to http://www.chandleraz.gov/clics/

2. Click on Development Services tab.

3. Click on schedule an inspection.

4. Type permit number in record number box – then click search button.

5. Click on schedule or request an inspection.

6. Choose inspections to schedule, select the day, select all day and click continue.

7. Verify location is correct and contact information is correct and click the continue tab.

8. Add additional notes, requests, instructions or information and click finish tab.

You can also track your permit status, review plan review comments and view inspection results from this site.

You can also schedule inspections through an Interactive Voice Response system.

This telephone number is (480) 782-3100. Before calling, you will need:

- Touch-tone telephone.
- Your permit number(s).
- Your inspection code(s). located on the inspection card or the city website. https://www.chandleraz.gov/government/departments/development-services/inspections

The Interactive Voice Response system will prompt you through the steps to:

- Schedule an inspection, cancel an inspection or to obtain inspection results.

You can also schedule inspections using the texting method. (844-281-3520)

To schedule an inspection with just one text:

Text: s permit number 3-digit inspection code date to 844-281-3520

Example: s bld200000 701 10/12

To cancel an inspection with just one text: text: c permit number 3-digit inspection code

to 844-281-3520

Example: c bld200000 701

To reschedule an inspection with just one text: text: resched permit number 3-digit inspection code to 844-281-3520

Example: resched bld200000 701

To get results of an inspection with just one text: text: result permit number to 844-281-3520

Example: result bld200000

Full text scheduling instructions can be found online at:

https://www.chandleraz.gov/government/departments/development-services/inspections

Work Exempt from Permit

A building permit is not required for the following:

1. One-story detached accessory structures provided the floor area does not exceed 120 square feet and the height does not exceed 7 feet.
2. Fences not over 7 feet high.
3. Retaining walls that are not over 4 feet in height measured from the bottom of the footing to the top of the wall, unless supporting a surcharge. City code restricts wall height for front and side yards. Contact the Planner of the Day at 480.782.3050 for more information.
4. Water tanks supported directly on grade if the capacity does not exceed 5,000 gallons and the ratio of height to diameter or width does not exceed 2:1.
5. Sidewalks and driveways.
6. Painting, papering, tiling, carpeting, cabinets, counter tops and similar finish work.
7. Prefabricated swimming pools that are less than 18 inches deep.
8. Swings and other playground equipment. These are only permitted behind a 6-foot-high wall in the side or rear yards.
9. Window awnings supported by an exterior wall that do not project more than 54 inches from the exterior wall and do not require additional support. Zoning review is required as a maximum of 24 inches (2 feet) is allowed into required building setbacks.
10. Like for like replacement of residential water heaters and water softeners, furnaces, pool or spa heating equipment, evaporative coolers, water treatment systems, circuit breakers and roof coverings where the replacement roof does not increase the load imposed upon the structural frame.

Additionally, a permit is not required for ordinary repairs to structures, replacement of lamps, or the connection of approved portable electrical equipment to approved permanently installed receptacles. Such repairs shall not include the cutting away of any wall, partition, or portion thereof; the removal or cutting of any structural beam or loadbearing support; the removal or change of any required means of egress; or rearrangement of parts of a structure affecting the egress requirements. Ordinary repairs shall not include addition to, alteration of, replacement or relocation of any standpipe,

water supply, sewer, drainage, drain leader, gas, soil, waste, vent or similar piping, electric wiring or mechanical or other work affecting public health or general safety.

Exemption from the permit requirements of the code shall not be deemed to grant authorization for any work to be done in any manner in violation of the code or any other laws or ordinances of this jurisdiction. **For questions regarding if a permit is required or not contact the Plan Reviewer of the Day at 480-782-3078 or e-mail them at** prod@chandleraz.gov.

WORKING WITHOUT A PERMIT

• The City of Chandler can issue a Legal Notice or an Order to Comply.

• There is an increased cost for obtaining a permit. Permit fees are doubled for building without a permit.

• There are potential hazards, such as fire danger and drinking water contamination.

• The City of Chandler can order the removal of non-compliant work, such as a room addition, and all costs are the responsibility of the homeowner.

• Issues often arise when you go to sell your house/ County Assessor records do not match, FHA will not provide a loan.

• In some cases, your homeowners' insurance may not cover issues that occur because of the non-permitted construction.

Building permits help ensure that the work is performed according to local building codes and city ordinances, and the contractors you hire are meeting these standards. Ask your contractor if they have obtained a permit for the work.

PERMIT HISTORY

Curious about the permit history of your home or a home you plan to purchase in Chandler? Just follow these easy steps:

1.https://developmentpermits.chandleraz.gov/clics/Default.aspx
2. Click on "Development Services" tab.
3. Enter your address or permit number if applicable.

This should provide the permit history of the home, for additional information you may need to submit a records request to records.requestinfo@chandleraz.gov

CONTACTS

We encourage everyone to use our online resources:

https://www.chandleraz.gov/government/department/development-services

Building:
prod@chandleraz.gov
(480)782-3078

Site:
site.reviewinfo@chandleraz.gov

Records:
records.requestinfo@chandleraz.gov

Addressing:
address.reviewinfo@chandleraz.gov

On-line:
plans.coordination@chanderaz.gov
(480) 782-3074

Planning:
pod@chandleraz.gov
(480) 782-3050

Civil:
cod@chandleraz.gov
(480) 782-3079

As-Builts:
ab@chandleraz.gov
(480) 782-3080

Permits:
ROD@chandleraz.gov
(480) 782-3074

Plot Plan

Every permit that requires a building plan must be accompanied by a plot plan. You may view an aerial photograph to assist with drawing the layout of the home and all buildings/structures and pools on the property at Maricopa County Assessor's GIS Interactive Maps http://maps.mcassessor.maricopa.gov/ A plot plan is a drawing of the lot showing the following:

- Location of property lines on all sides. The location of street side property lines will vary from 3 to 6 feet behind the sidewalk.
- All existing buildings on the lot, including their dimensions and distances to property lines.
- All proposed additions or structures with their dimensions and distances to property lines.
- Total square footage of the lot, existing buildings, and proposed additions.
- Identify all required setbacks. Contact the Planner of the Day at 480-782-3050 or e-mail them at pod@chandleraz.gov for more information. (See example below).
- To find the approximate front property line or determine the right-of-way (ROW) width, contact the City of Chandler, Transportation & Development Engineering Division at 480-782-3348.

Carport to Garage Conversion

This section applies to a building permit for a carport to garage conversion that is attached to a primary building. If this project is *not* attached to a primary building, please refer to the section on detached accessory buildings (p. 22). A carport is defined as a structure primarily used for parking vehicles, with 2 sides totally open, with a minimum clear dimension of 9 feet by 19 feet per parking space.

A garage is defined as a structure primarily used for parking vehicles with a minimum clear dimension of 9 feet by 19 feet per parking space.

The garage shall be separated from the residence and its attic by not less than 1/2-inch gypsum board applied to the garage side. If the dwelling is of masonry construction, it meets the occupancy separation required between the garage and dwelling. There must be a separation between the garage and any living space above by a minimum 5/8-inch type X gypsum board.

Any door into the dwelling from the garage must be self-closing and:

- Minimum 20-minute fire rated; or
- 1⅜-inch solid wood door; or
- Solid or honeycomb core steel doors not less than 1⅜ inches thick.

The required side-hinged main exit door for the house cannot open into a garage.

Under no circumstances shall a private garage have any opening into a room used for sleeping purposes. Smoke alarms and carbon monoxide detectors are required when performing interior work that requires a permit, except work such as plumbing or mechanical (air conditioning). If they are not pre-existing throughout the whole house, they must be added. Dual (CO & Smoke) alarms are available. They will also be required to be interconnected and must be tested by the Building Inspector.

Any main door to the outside must have a landing. The width of each landing shall not be less than the door served. Every landing shall have a minimum dimension of 36 inches measured in the direction of travel.

A switched exterior light is required at the exterior side of each egress door. . A light must also be provided inside the garage and the switch must be located at the interior door. Switches located on the exterior of a building shall be weatherproof.

A minimum of one electrical outlet for each vehicle space is required in a garage (in addition to any provided for laundry or garage door openers). A 20-amp dedicated circuit is required for the code required garage receptacles supplies by #12-AWG wire minimum.

All readily accessible electrical outlets shall have ground fault circuit interrupter (GFCI) protection.

Non-bearing exterior walls added on top of existing slabs do not need additional footings but shall have a bottom plate of treated wood or wood of natural resistance to decay. This bottom plate must be fastened to the slab in an approved manner and must be 4 inches above adjoining finished grade for masonry veneer and 6 inches above for other materials. Usually this requires that you either thicken your slab or build a stem wall. This detail is required as part of your submittal.

The garage conversion must be architecturally integrated with the existing residence. The drawings that are submitted need to clearly indicate what the wall and roof covering are on the existing residence as well as on the proposed garage.

Fences and Walls

It is the responsibility of the homeowner to locate the property lines and to contact the Arizona Blue Stake Center with a request to have all underground utilities located. The Arizona Blue Stake Center can be reached at 602-263-1100, or 800.-782-5348. You need to call at least two days before you dig.

All fences must be maintained a minimum of 3 feet from fire hydrants or utilities.

If a pool fence is being replaced, the pool area must remain secured during construction.

Per Planning rules, the maximum fence height is 7 feet in rear and side yards. The maximum fence height in front yards is 3 feet.

If you live on a street corner, whether or not it is an arterial, collector or local street, you must locate your fence, so it does not pose as a safety hazard to pedestrians and drivers. Street Standards C-246 to C-248 show the required clearances at corners and can be found on the City of Chandler website. Call 480-782-3050 if you have any questions.

Prior Planning approval and a valid permit is required in cases where a fence would be over **7** feet high.

A permit is required if the wall is used for retaining earth and is over 4 feet in height measured from the bottom of the footing to the top of the wall.

A permit is required if a fence is to be placed on top of a retaining wall.

4-inch-thick walls are not an approved system to be used as retaining walls.

Regardless of height, all fences or walls require zoning clearance. Zoning staff review and approve the fence/wall placement and type of material. Call 480-782-3050 to speak to the Planner of the Day with any questions.

Landscaping

Landscaping does not generally require a permit. However, a permit is needed to install an irrigation system (but no plan review is needed). This permit allows inspectors to check the installation of the required anti-siphon valve or pressure backflow preventer and electrical timers.

The landscape inspector will need access to the main electrical panel for purposes of inspecting the circuit breaker. The circuit breaker must be compatible with the electrical panel brand. Electrical timers may not “piggy-back” on another circuit breaker.

Installation

It is recommended that a licensed contractor install the anti-siphon/vacuum breaker assemblies. If someone other than a licensed contractor does the installation, make sure the assembly is positioned correctly with the arrow pointed in the direction of the water flow. The use of lead solder is prohibited.

Any aboveground piping before the anti-siphon/vacuum breaker assembly may be copper or galvanized pipe. If PVC is used, it must be protected from physical damage and be sunlight resistive. All connecting piping installed in the ground before the antisiphon/vacuum breaker must be buried at least 12 inches deep.

Vacuum breakers shall be installed a minimum of 6 inches above the flood level rim of the fixture or device. The flood level rim of hose connections shall be the maximum height at which any hose is utilized.

Electrical and Gas Permits

Electrical Permits

Clearly indicate the size and type of conductors (wire) being used, the size and type of conduit, and the proposed burial depth. Indicate the length of all runs above ground or through an unconditioned space such as an attic.
Provide a panel schedule showing the existing and new breakers and if you are adding a sub-panel. Load calculations may also be required. (See Appendix B at the back of this booklet for a calculation form that you can use to simplify the process.)

Provide grounding electrode conductor and grounding electrode. :

- Grounding electrode is a metallic rod driven into the earth.
- Grounding electrode is a minimum of 8 feet long.
- Grounding electrode conductor must terminate on rod with an acorn clamp.
- Grounding electrode conductor must be a minimum solid #4 AWG bare copper conductor.

If a concrete encased grounding electrode (UFER) is provided, the previous items do not apply. The UFER shall be 20 feet of solid #4 AWG bare copper conductor in concrete with solid #4 AWG bare electrode conductor to the service entrance section.

For homes with metal water or gas piping there are specific requirements for bonding to the electrical service. Because these requirements may vary depending on the locations of the metal pipe it is best to consult an electrician or ask for more specific information at our plan review counter.

All overhead services must have a point of attachment on the weather head mast.

All breakers inside the service panel must be compatible with the panel cover (dead front) and labeled with permanent ink.

Gas Permits

When adding a gas line inside the residence, or attaching to an existing gas stub out, you will need to:

- Provide a gas riser schematic that shows the length of all sections of the gas line, starting at the gas meter. Show all existing appliances, as well as any proposed additions.
- Provide the total BTU rating of each appliance.
- Provide each line size.
- Provide each line type.

If you propose adding a new gas line from the meter you will need to:

- Show the length of all sections of the gas line, starting at the gas meter.
- Provide the total BTU rating of each appliance.
- Provide each line size.
- Provide each line type.
- Provide trench depth / burial depth (Pipe must be 12” below grade minimum)..

Tests of systems shall be performed at no less than 1-1/2 times the proposed maximum working pressure, but no less than 3 psig. Most residential systems (including propane) will be at 3 psig unless you have a high-pressure system above 2.0 psi. Test duration shall not be less than 10 minutes. All tests must be made through the open valve and flex line. The flex line must be capped at the appliance connection.

The use of heat fusion PE (polyethylene) plastic pipe requires a minimum 8,12 or 18-inch-deep trench depending on the situation and a continuous insulated 18-gauge copper tracer wire. PE is not allowed for use beneath any building slab or structure.

All metal gas piping used in underground systems shall have factory-applied coating, and schedule 40 minimum weight.

Field wrapping is limited to fittings and short sections of piping, where the factory wrap has been damaged or stripped for threading or welding. Field wrapping is made with 2 layers of 20 mil tape with primer on the pipe and between each wrap.

Galvanized fittings or piping are prohibited in underground gas systems.

Patio Covers

Prior to submitting for a permit, please speak with a City Planner for zoning district and minimum building setback requirements. Call the Planner of the day at 480-782-3050 or e-mail them at pod@chandleraz.gov.

Posts for patio covers will require a footing.

Rafters must be sized according to tables in the International Residential Code, and beams must be sized to carry the calculated roof loads. (Laminated beams may not be used in exposed locations unless they are approved for exterior use.) Ledgers supporting rafters must be secured directly to existing wall framing members.

Rafters may not be attached directly to the existing fascia or to roof truss tails. They must bear on the existing wall top plate or attach directly to the house by ledger board that butts directly against vertical studs. (Any stucco or gypsum board covering the studs must be removed.)

The minimum required roof slope is:

Material	**Slope**
Asphalt Shingles	2:12
Clay Tile	2.5:12
Roll Roofing	1:12

The minimum roof slope varies depending on the type of roofing material you propose to use. The type of roofing material shall be indicated on your drawings as well as the roof slope. There shall be a mechanical path of load transfer from the roof to the foundation. Show all uplift rated connectors, the manufacturer and part number.

The minimum height from the finished floor to the bottom of any beam is 6 feet, 8 inches.

If drywall is installed on the ceiling it must be listed for the application. Please refer to the patio cover details on the following pages. You may copy these details and use them as part of your submittal.

Metal patio covers within 5’ of a swimming pool shall be bonded to the pool equipotential bonding. At least one receptacle outlet that is accessible while standing at grade level and located not more than 6 feet, 6 inches above grade, shall be installed outdoors at the front

and back of each dwelling unit having direct access to grade. Balconies, decks, and porches that are accessible from inside of the dwelling unit shall have at least one receptacle outlet installed within the perimeter of the balcony, deck, or porch. The receptacle shall be located not more than 6 feet, 6 inches above the balcony, deck, or porch surface.

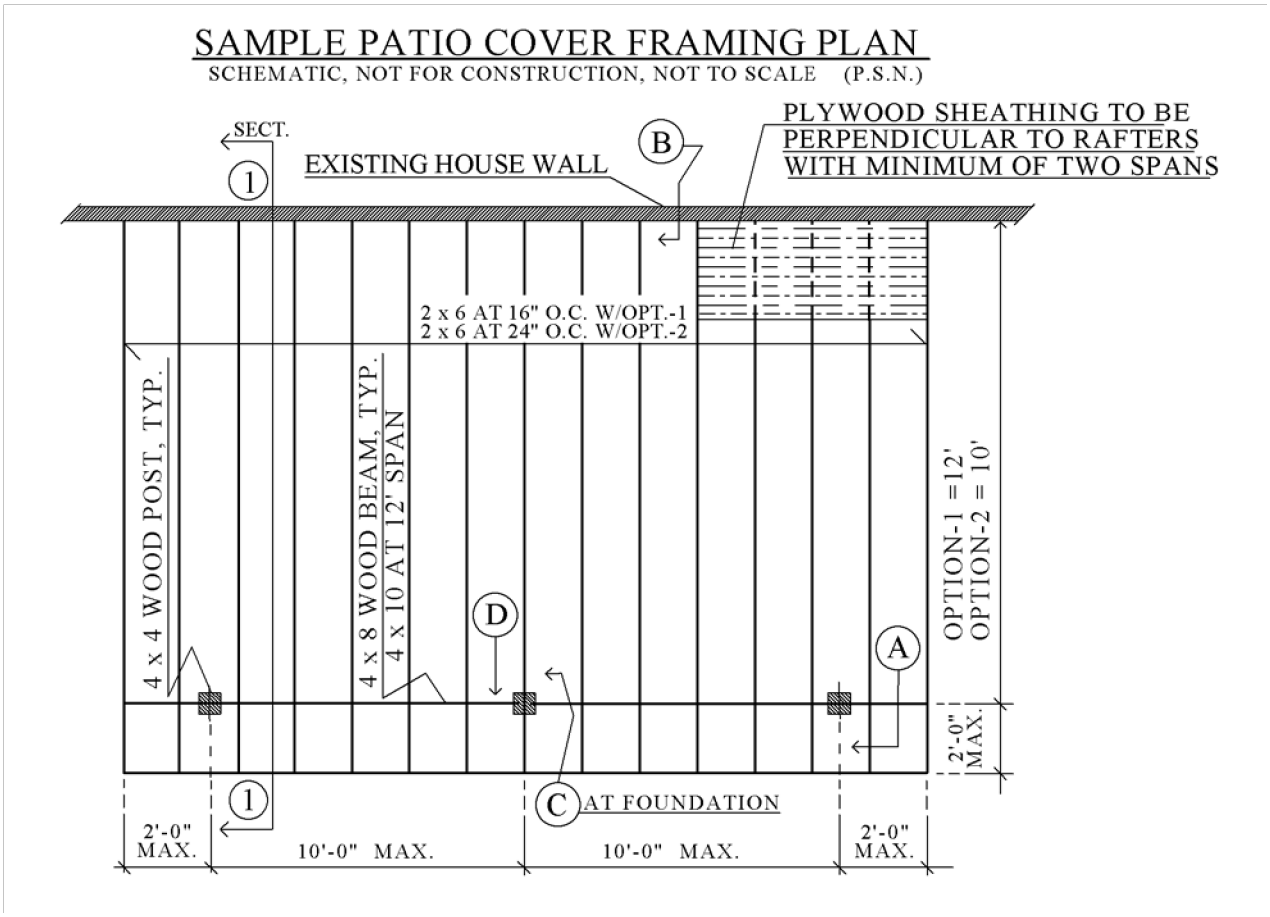

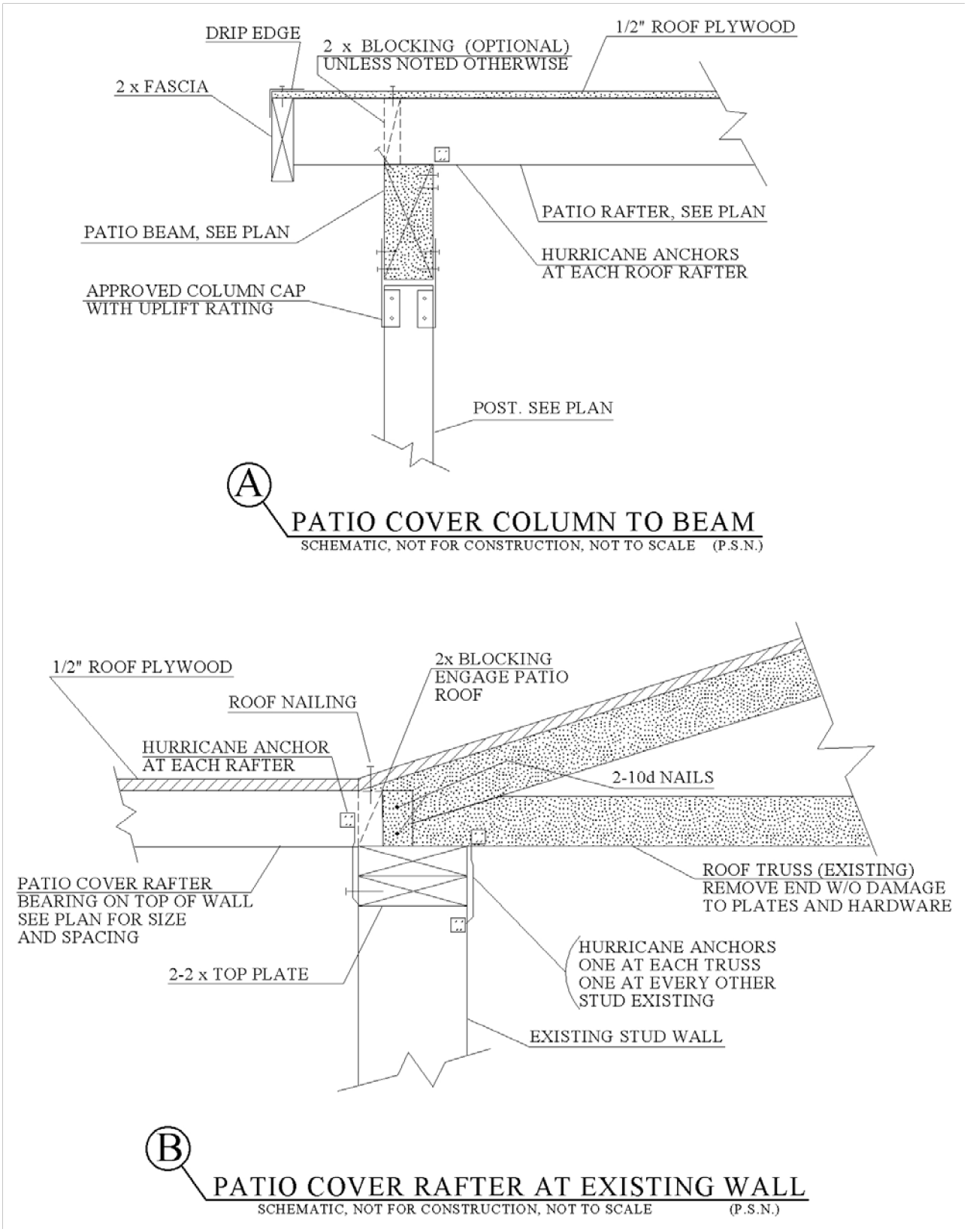
DRIP EDGE
2 x BLOCKING (OPTIONAL)
UNLESS NOTED OTHERWISE
1/2" ROOF PLYWOOD
2 x FASCIA
PATIO RAFTER, SEE PLAN
PATIO BEAM, SEE PLAN
HURRICANE ANCHORS
AT EACH ROOF RAFTER
APPROVED COLUMN CAP
WITH UPLIFT RATING
POST. SEE PLAN
A
PATIO COVER COLUMN TO BEAM
SCHEMATIC, NOT FOR CONSTRUCTION, NOT TO SCALE (P.S.N.)
1/2" ROOF PLYWOOD
2x BLOCKING
ENGAGE PATIO
ROOF
ROOF NAILING
HURRICANE ANCHOR
AT EACH RAFTER
2-10d NAILS
ROOF TRUSS (EXISTING)
REMOVE END W/O DAMAGE
TO PLATES AND HARDWARE
PATIO COVER RAFTER
BEARING ON TOP OF WALL
SEE PLAN FOR SIZE
AND SPACING
HURRICANE ANCHORS
ONE AT EACH TRUSS
ONE AT EVERY OTHER
STUD EXISTING
2-2 x TOP PLATE
EXISTING STUD WALL
B
PATIO COVER RAFTER AT EXISTING WALL
SCHEMATIC, NOT FOR CONSTRUCTION, NOT TO SCALE (P.S.N.)

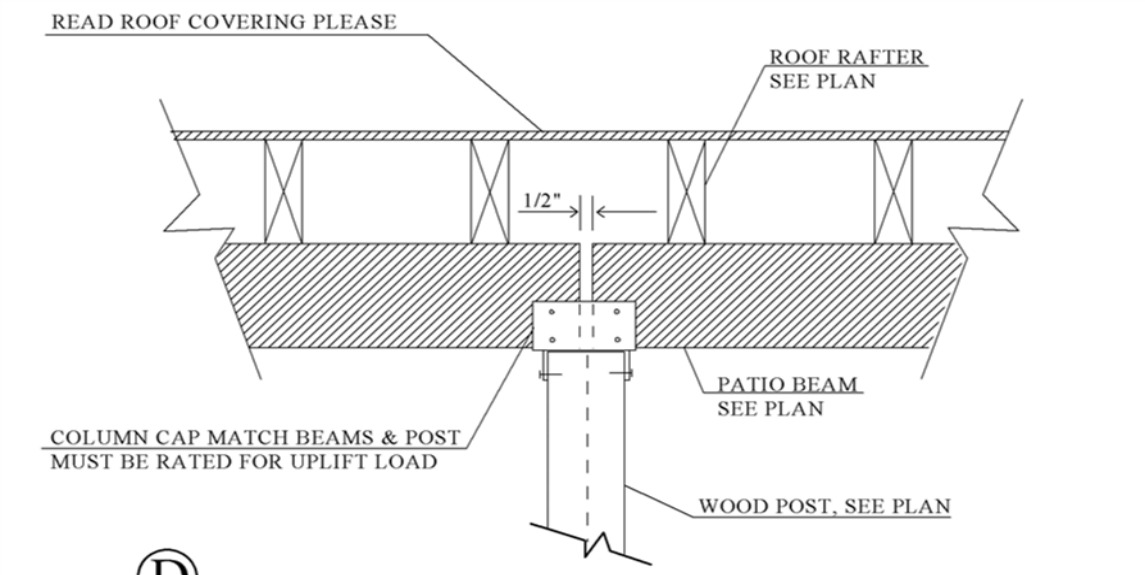
READ ROOF COVERING PLEASE
ROOF RAFTER
SEE PLAN
1/2"
PATIO BEAM
SEE PLAN
COLUMN CAP MATCH BEAMS & POST
MUST BE RATED FOR UPLIFT LOAD
WOOD POST, SEE PLAN
D
BEAMS AT CENTER POST
SCHEMATIC, NOT FOR CONSTRUCTION, NOT TO SCALE (P.S.N.)

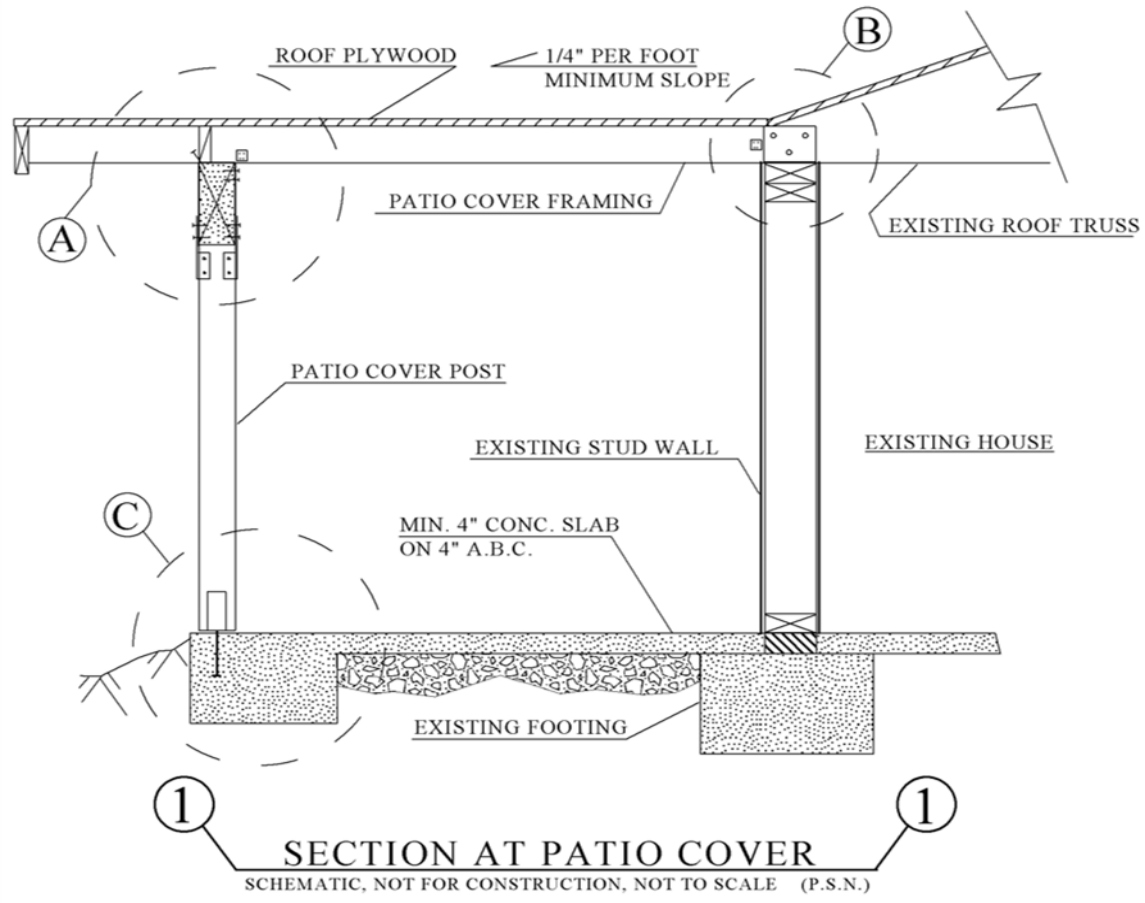
B
ROOF PLYWOOD
1/4" PER FOOT
MINIMUM SLOPE
A
PATIO COVER FRAMING
EXISTING ROOF TRUSS
PATIO COVER POST
EXISTING STUD WALL
EXISTING HOUSE
C
MIN. 4" CONC. SLAB
ON 4" A.B.C.
EXISTING FOOTING
1
1
SECTION AT PATIO COVER
SCHEMATIC, NOT FOR CONSTRUCTION, NOT TO SCALE (P.S.N.)

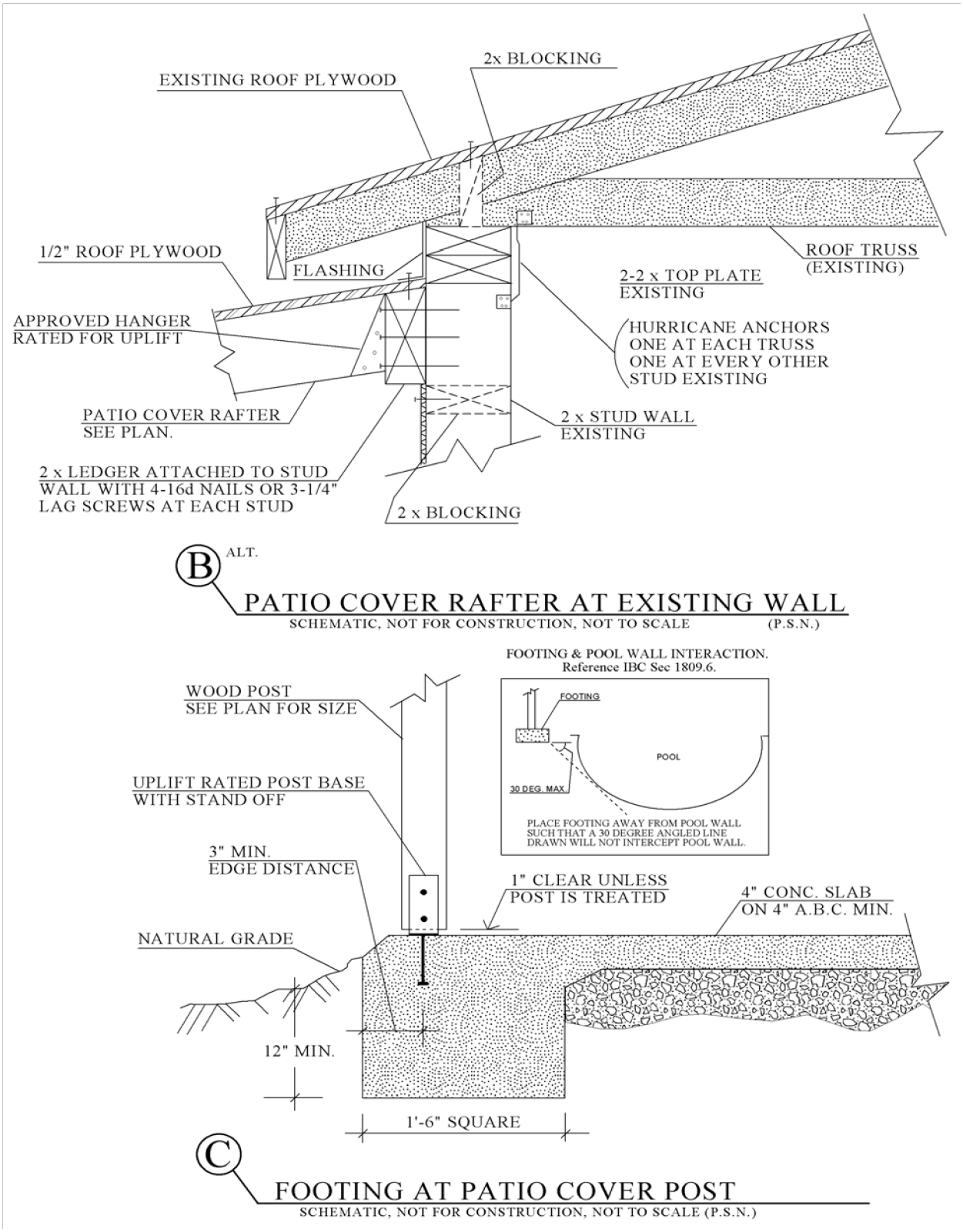
2x BLOCKING
EXISTING ROOF PLYWOOD
1/2" ROOF PLYWOOD
FLASHING
ROOF TRUSS
(EXISTING)
2-2 x TOP PLATE
EXISTING
APPROVED HANGER
RATED FOR UPLIFT
HURRICANE ANCHORS
ONE AT EACH TRUSS
ONE AT EVERY OTHER
STUD EXISTING
PATIO COVER RAFTER
SEE PLAN.
2 x STUD WALL
EXISTING
2 x LEDGER ATTACHED TO STUD
WALL WITH 4-16d NAILS OR 3-1/4"
LAG SCREWS AT EACH STUD
2 x BLOCKING
B ALT.
PATIO COVER RAFTER AT EXISTING WALL
SCHEMATIC, NOT FOR CONSTRUCTION, NOT TO SCALE (P.S.N.)
FOOTING & POOL WALL INTERACTION.
Reference IBC Sec 1809.6.
FOOTING
POOL
30 DEG. MAX
PLACE FOOTING AWAY FROM POOL WALL
SUCH THAT A 30 DEGREE ANGLED LINE
DRAWN WILL NOT INTERCEPT POOL WALL.
WOOD POST
SEE PLAN FOR SIZE
UPLIFT RATED POST BASE
WITH STAND OFF
3" MIN.
EDGE DISTANCE
1" CLEAR UNLESS
POST IS TREATED
4" CONC. SLAB
ON 4" A.B.C. MIN.
NATURAL GRADE
12" MIN.
1'-6" SQUARE
C
FOOTING AT PATIO COVER POST
SCHEMATIC, NOT FOR CONSTRUCTION, NOT TO SCALE (P.S.N.)

Storage Sheds/ Open-air Ramadas/ Detached Buildings/Accessory Dwelling Units

Prior to submitting for permit, determine zoning requirements for your single-family residential subdivision. For detached buildings and structures such as, for example, storage sheds, open-air ramadas/gazebos, and other accessory buildings, compliance with a property's zoning district is required including minimum building setbacks and maximum lot coverage as applicable. Please speak with a City Planner to determine your subdivision's zoning requirements. Based on the square footage and height proposed, different building setbacks apply. The Matrix defines each type of structure and applicable zoning codes in Chapter 35 (Zoning Code) of the City Code. **For all Planning or Zoning questions please contact the Planner of the Day at 480-782-3050 or e-mail them at pod@chandleraz.gov**

35-2202. - Accessory buildings.

The following standards shall apply to all accessory buildings except for accessory dwelling units.

(1) Accessory buildings such as but not limited to guest quarters, garages, and workshops shall be located behind the front wall plane of the home and in the side yard or in the rear yard of the primary residence and shall not occupy more than thirty (30) percent of the rear area.

(2) Accessory buildings shall meet the minimum side and rear yard setbacks for the district in which it is located. Any accessory buildings within a Planned Area Development (PAD) zoning designation shall be subject to the applicable provisions of the adopted preliminary development plan.

(3) Accessory buildings shall not exceed fifteen (15) feet in height.

(4) No carport or garage entered from an alley shall be located closer than ten (10) feet to a rear lot line.

(5) No accessory building shall be constructed prior to the construction of a principal building.

(6) Guest quarters are permitted subject to the following:

(a) Guest quarters shall utilize the same utility services provided to the principal building (i.e. separate utility meters directly serving the guest quarters shall not be permitted).

(b) No ovens, ranges, or built-in cooking facilities shall be permitted.

(7) A maximum of one accessory building (e.g. guest quarters, garage, workshop) is permitted on a lot.

(8) The exterior design of any accessory building shall be commensurate with the exterior design of the primary residence and consistent in materials, colors and architectural style or shall comply with the following standards:

(a) Exterior wall cladding constructed of stucco or exterior insulation and finish system (EIFS).

(b) Concrete tile roof with a 4:12 slope.

(c) Additional accent material may be added if the materials are consistent with the architectural style of the primary residence.

35-2202.1. - Open-air ramadas.

(1) Open-air ramadas are permitted within the side yard or rear yard of the property.

(2) The maximum height shall not exceed ten (10) feet as measured to the top of roof or lattice.

(3) More than one ramada is permitted on the property subject to the provisions of this section. The total square footage of all ramadas shall not occupy more than thirty (30) percent of the rear area and shall be counted toward the zoning district's maximum lot coverage.

(4) Ramadas shall not be located closer than five (5) feet to the side and rear property lines as measured from the edge of the roof or cover. If an alley, or common open space public or private open space, other than a street, adjoins the rear yard along one (1) or more of the property lines, the five (5) foot setback from that property line to such ramada may be eliminated.

(5) Ramadas shall be open on all sides except one, which may have a solid wall up to a maximum of seven (7) feet in height, excluding chimneys.

35-2203. - Storage sheds.

(1) Storage shed limited to one (1) per lot; provided, however, that such shed shall be located in the side or rear yard of the property, cannot be served by any utility (electricity, gas or water) and all drainage therefrom must flow back onto the owner's property.

(2) A masonry or concrete block wall may serve as the wall or walls of said structure as long as the height of said fence is equal to or greater than the maximum height of the storage shed.

(3) Storage sheds not exceeding seven (7) feet in building height shall not be subject to rear and side yard setback requirements.

(4) Storage sheds may exceed seven (7) feet in building height provided at no point shall any portion of the storage shed exceed a line sloping inward and upward toward the center of the lot at a ratio of two (2) additional feet of setback for each additional one (1) foot of building height up to a maximum of nine (9) feet in building height from the side and rear property lines.

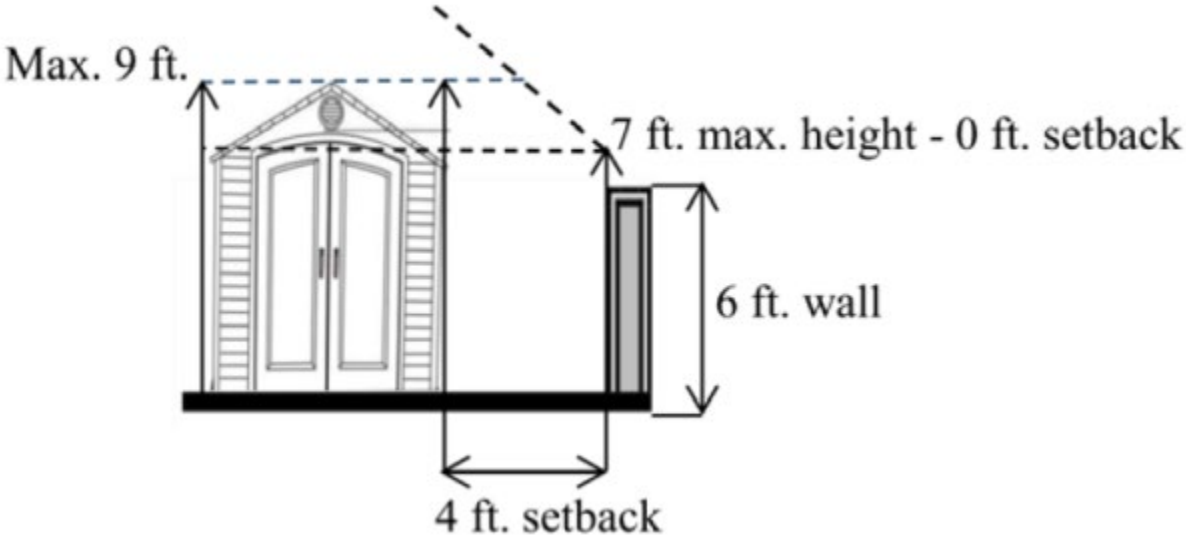

(5) Storage sheds shall not exceed one hundred twenty (120) square feet in area.

35-2202.2. - Accessory dwelling units.

(1) Accessory dwelling units are permitted on any lot or parcel where a single-family dwelling is the principal use, subject to the following:

(a) A maximum of one attached and one detached accessory dwelling unit shall be permitted. An accessory dwelling unit shall not exceed seventy-five (75) percent of the gross floor area of the existing single-family dwelling or one thousand (1,000) square feet, whichever is less. For the purposes of this subsection, gross floor area means the interior habitable area of the single-family dwelling.

(b) One additional detached accessory dwelling unit shall be permitted on a lot or parcel that is one acre or more in size if at least one accessory dwelling unit on the lot or parcel is a restricted-affordable dwelling unit. For purposes of this section, a restricted-affordable dwelling unit means a dwelling unit that may only be rented to households earning eighty (80) percent or less of area median income, which limitation has been established through a recorded deed restriction or development agreement giving the City the authority to enforce the limitation.

(c) An accessory dwelling unit shall comply with all limitations on building height, intensity of lot use, and front yard setbacks for the zoning district in which it is located; except rear and side yard setbacks shall be no less than five (5) feet.

(d) Any uninhabitable space (e.g., a garage) attached to an accessory dwelling unit shall comply with the minimum side and rear yard setbacks for the district in which it is located.

(e) Accessory dwelling units shall be served by the same water, sewer, and electric-utility providers and meters as the primary residence.

(f) The exterior design of an accessory dwelling unit must comply with the following standards:

1. Exterior wall cladding constructed of stucco or exterior insulation and finish system (EIFS).

2. Concrete tile roof with a 4:12 slope.

3. Additional accent material may be added if the materials are consistent with the architectural style of the primary residence.

Alternatively, at the election of the property owner, the exterior design may be commensurate with the exterior design of the primary residence and consistent in materials, colors and architectural style.

(g) An accessory dwelling unit shall have a separate and independent entrance from the primary residence.

(h) A lot or parcel containing an accessory dwelling unit shall not be subdivided or split into two or more lots or parcels unless:

1. Each lot or parcel complies with minimum lot size requirement of the zoning district in which it is located;

2. Separate utility connections are provided to each dwelling unit;

3. Legal ingress and egress is provided to each lot; and

4. All lots and dwelling units comply with all City Code requirements.

An accessory building cannot be constructed in advance of the principal structure. It cannot be used for dwelling purposes. Indicate the proposed use of your building on your drawings.

Accessory buildings shall be architecturally compatible with the principal building. Provide information on your drawings indicating the paint color and wall and roof covering of the existing principal building.

Backyard Chicken Regulations - City Code Section 14-33

- Each single-family property may keep up to five chickens.
- Chickens must be contained within the rear and side yards and may not be permitted to trespass upon another property or upon any street, alley, or other public place.
- Chickens must be housed in a secured chicken coop.
- The outer edge of the chicken coop/structure may not be closer than five feet from any property line.
- Chicken coops may not exceed the height of the surrounding property wall.
- Roosters are prohibited.

Permits - City Code Section 35-2202

Chicken coops exceeding 120 square feet in size are considered to be an accessory building and:

- Require a building permit
- Must comply with building setbacks for an accessory building
- May not exceed 15 feet in height
- May not exceed 30% of the total rear yard area, and
- Must be designed to match the materials and colors of the home.

Any coop connected to utilities (electricity or water) require a building permit regardless of size.

Prior to building, check with local utility companies for any easement locations.

Utilities may be provided in accessory buildings to include mechanical, plumbing, water sewer, heating, air conditioning, electrical or gas. If your accessory building includes conditioned space, see the requirements on page 31 of the section regarding Room Additions in this manual for the minimum energy efficiency requirements.

Provide a panel schedule showing the existing and new breakers if you propose adding a sub-panel. Load calculations may also be required. (See Appendix B at the back of this booklet for a calculation form that you can use to simplify the process.)

If you plan to use engineered roof trusses on your project, you must submit sealed engineered roof truss calculations with your permit application.

Enclosed attics and enclosed rafter spaces formed where ceilings are applied directly to the underside of roof rafters shall have cross ventilation for each separate space by ventilating openings protected against the entrance of rain or snow. Ventilating openings shall be provided with corrosion-resistant wire mesh with ⅛-inch minimum to ¼-inch maximum openings.

The total net free ventilating area shall not be less than 1 to 150 of the area of the space ventilated, except that the total area is permitted to be reduced to 1 to 300, if at least 40 percent and not more than 50 percent of the required ventilating area is provided by ventilators located in the upper portion of the attic or rafter space. Upper ventilators shall be located no more than 3 feet below the ridge or highest point of the space, measured vertically, with the balance of the required ventilation provided by eave or cornice vents. Where the location of wall or roof framing members conflicts with the installation of upper ventilators, installation more than 3 feet below the ridge or highest point of the space shall be permitted.

Unvented attics are also allowed. Call our Building Plan Reviewers for assistance at (480) 782-3078.

You must include roof vent calculations in your drawings.

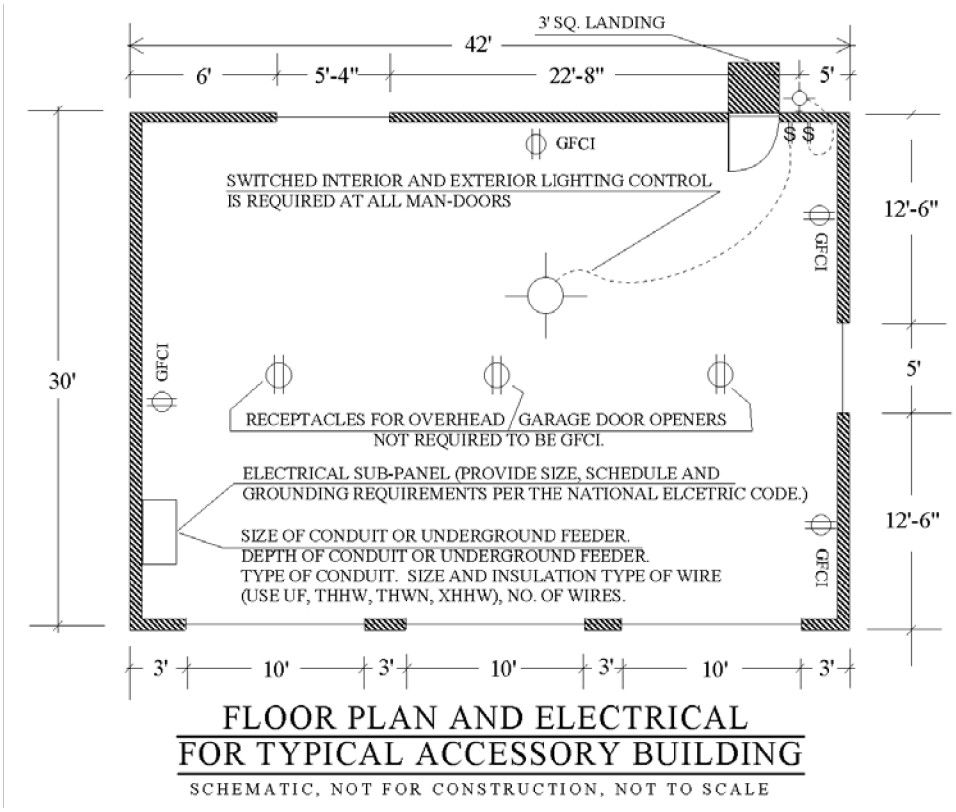

FLOOR PLAN AND ELECTRICAL
FOR TYPICAL ACCESSORY BUILDING

SCHEMATIC, NOT FOR CONSTRUCTION, NOT TO SCALE

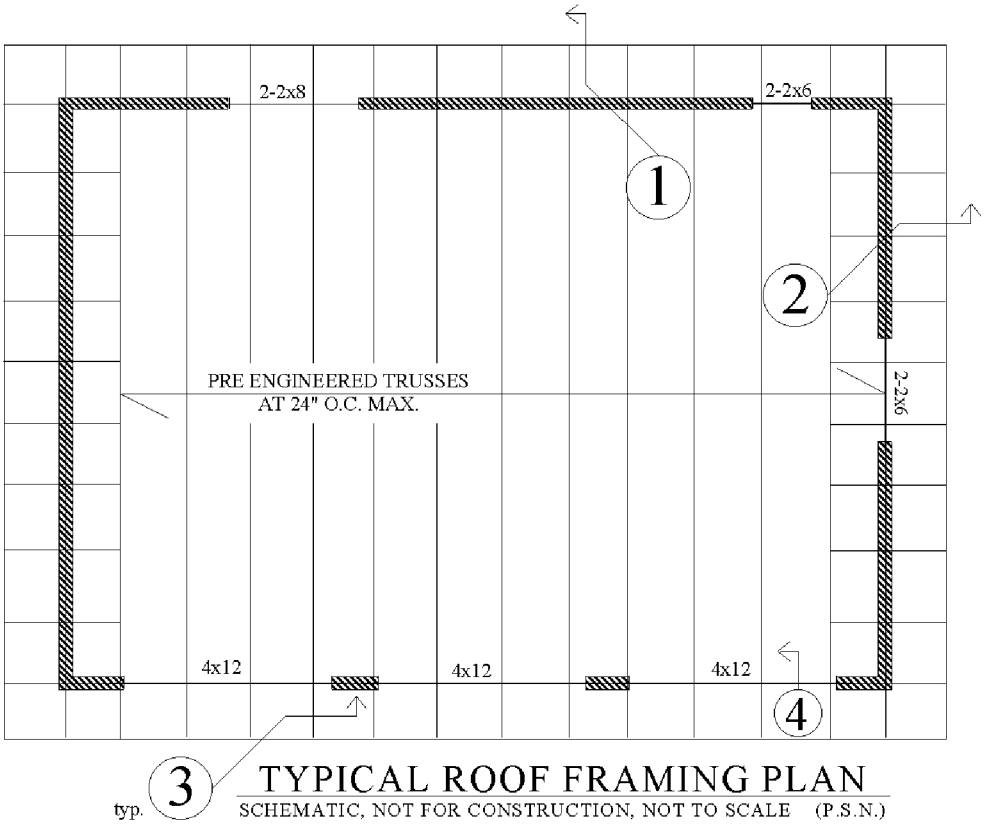

TYPICAL ROOF FRAMING PLAN

SCHEMATIC, NOT FOR CONSTRUCTION, NOT TO SCALE (P.S.N.)

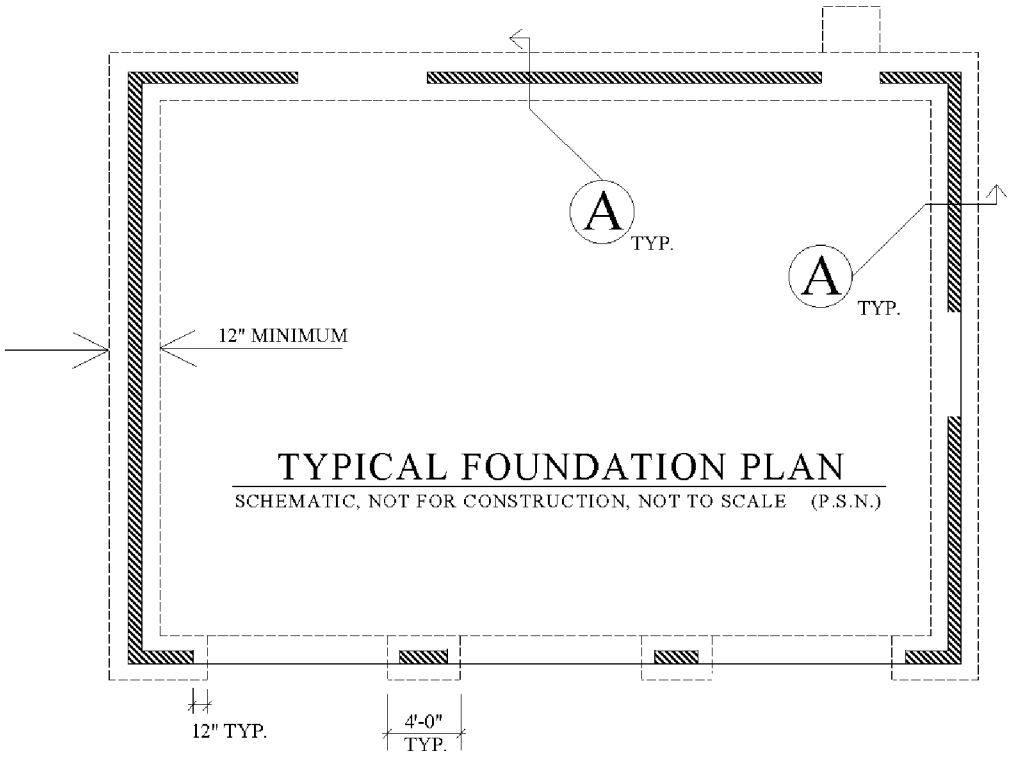

TYPICAL FOUNDATION PLAN

SCHEMATIC, NOT FOR CONSTRUCTION, NOT TO SCALE (P.S.N.)

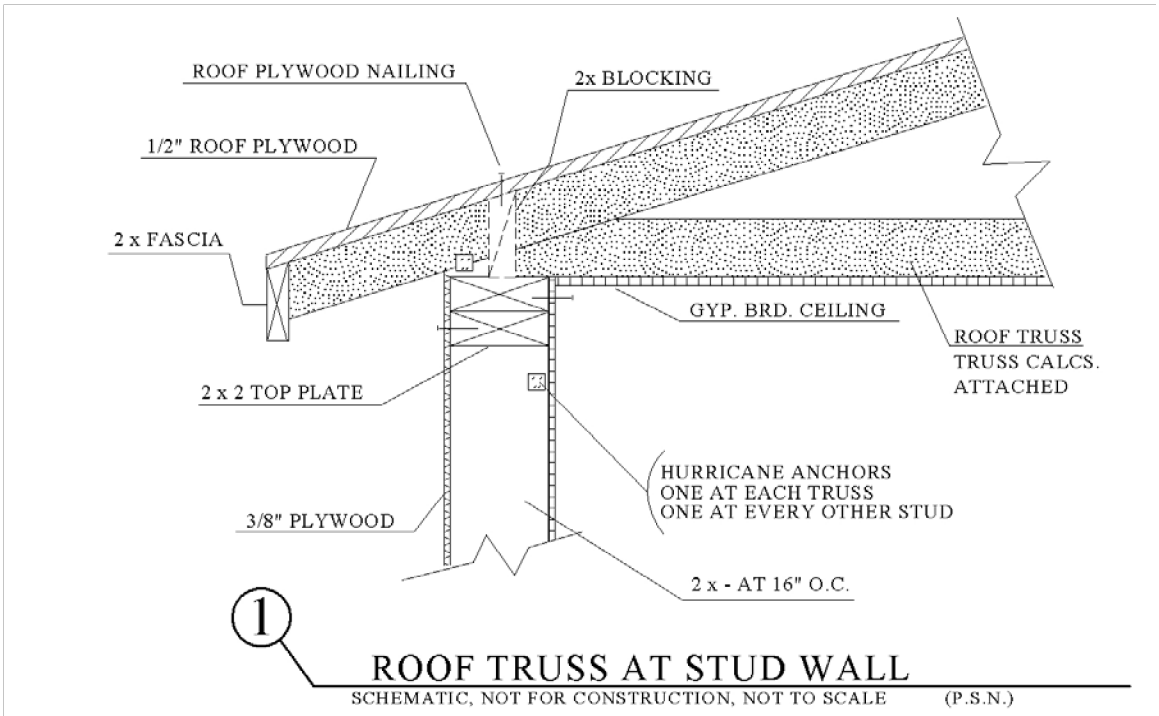

1 ROOF TRUSS AT STUD WALL

SCHEMATIC, NOT FOR CONSTRUCTION, NOT TO SCALE (P.S.N.)

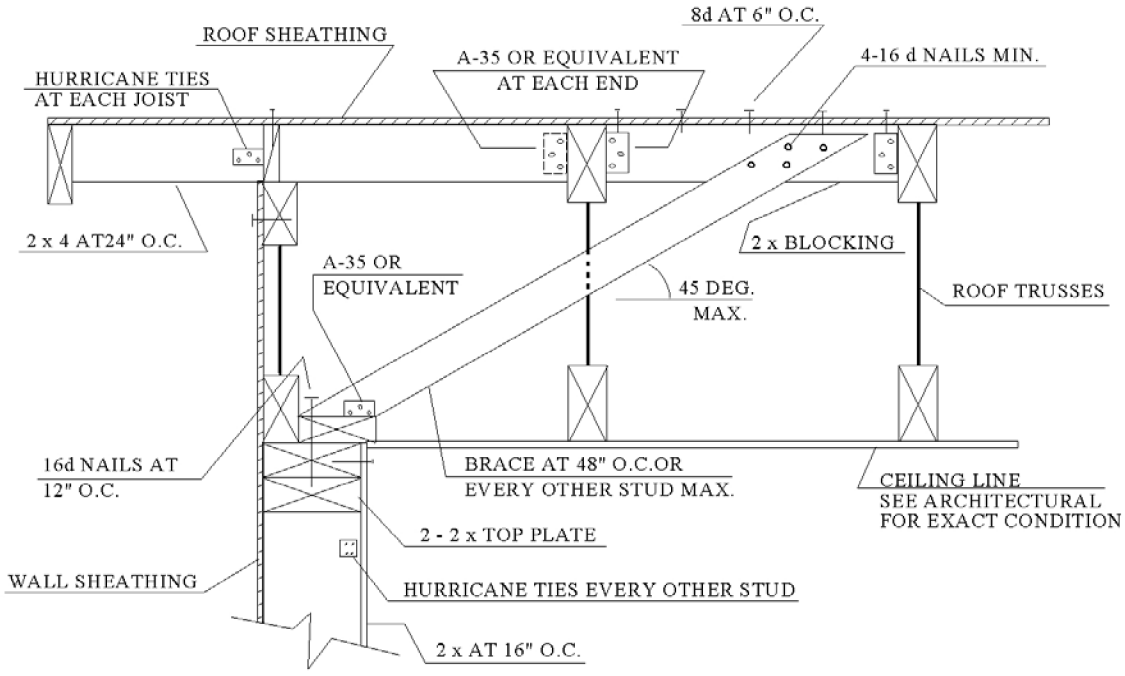

2 GABLE-END BRACE AT ROOF FRAMING

SCHEMATIC, NOT FOR CONSTRUCTION, NOT TO SCALE (P.S.N.)

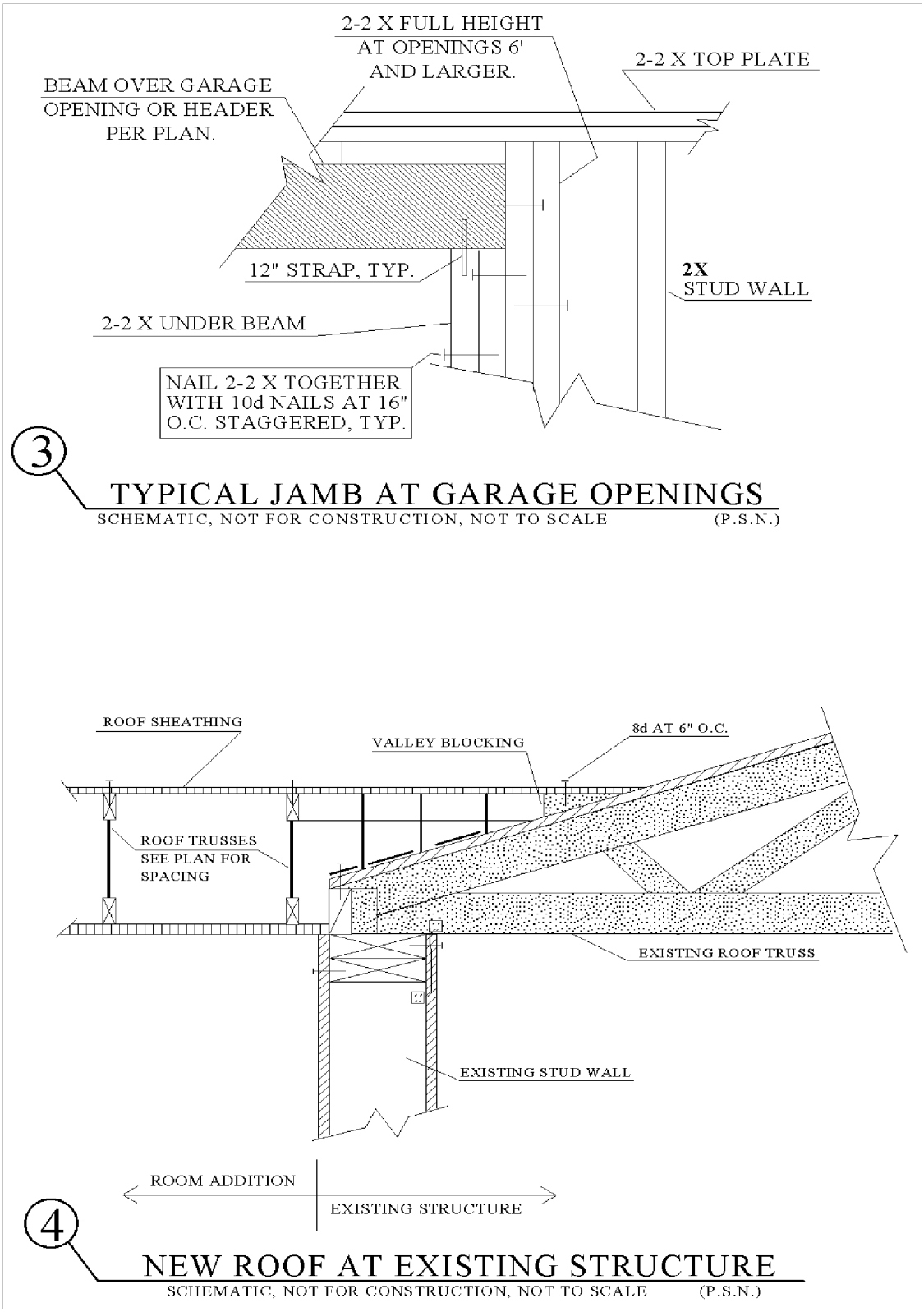
2-2 X FULL HEIGHT
AT OPENINGS 6'
AND LARGER.
2-2 X TOP PLATE
BEAM OVER GARAGE
OPENING OR HEADER
PER PLAN.
12" STRAP, TYP.
2X
STUD WALL
2-2 X UNDER BEAM
NAIL 2-2 X TOGETHER
WITH 10d NAILS AT 16"
O.C. STAGGERED, TYP.
3
TYPICAL JAMB AT GARAGE OPENINGS
SCHEMATIC, NOT FOR CONSTRUCTION, NOT TO SCALE (P.S.N.)
ROOF SHEATHING
VALLEY BLOCKING
8d AT 6" O.C.
ROOF TRUSSES
SEE PLAN FOR
SPACING
EXISTING ROOF TRUSS
EXISTING STUD WALL
ROOM ADDITION
EXISTING STRUCTURE
4
NEW ROOF AT EXISTING STRUCTURE
SCHEMATIC, NOT FOR CONSTRUCTION, NOT TO SCALE (P.S.N.)

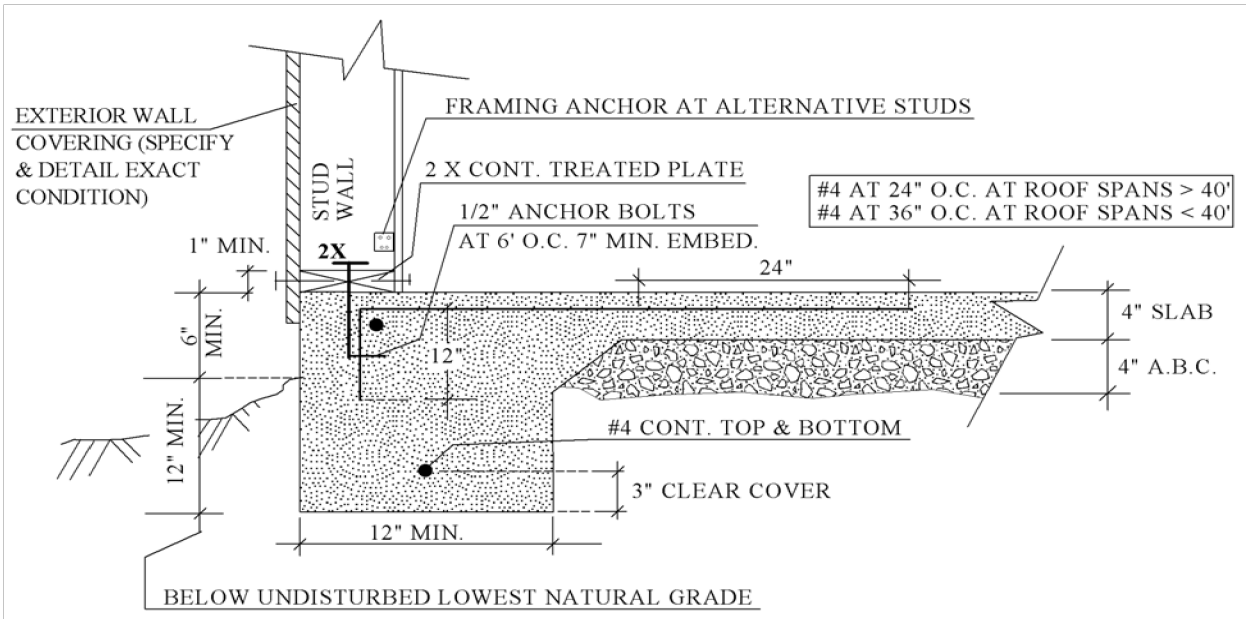

A

MONOLITHIC FOOTING AT STUD WALL

SCHEMATIC, NOT FOR CONSTRUCTION, NOT TO SCALE (P.S.N.)

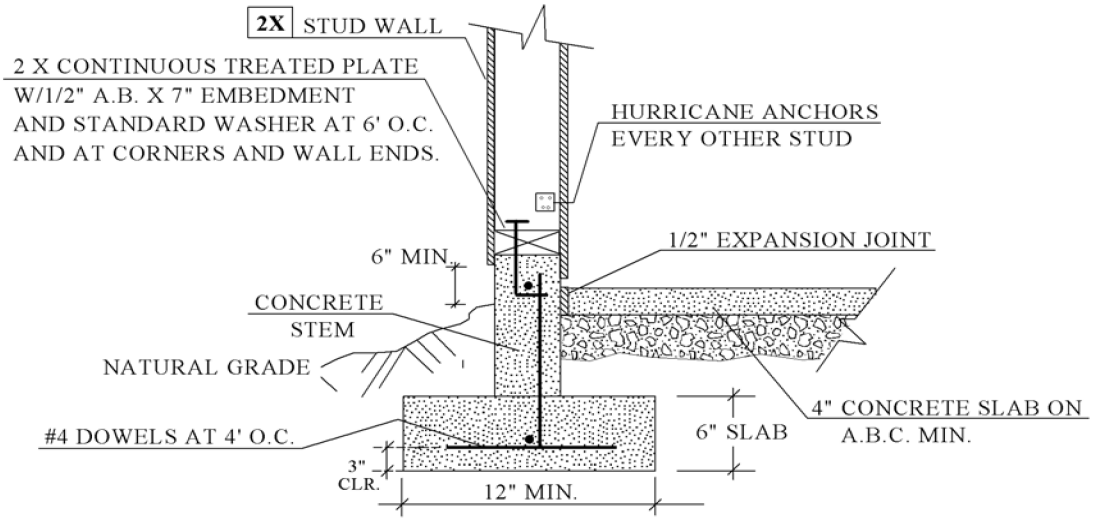

A ALT.

TYPICAL FOOTING AT STUD WALL

SCHEMATIC, NOT FOR CONSTRUCTION, NOT TO SCALE (P.S.N.)

Arizona Rooms

Arizona rooms are defined here as covered patios/porches that are to be enclosed with insect screening or a combination of insect screening and a "knee wall" so that at least 65% of the longer wall and one additional wall, below a minimum of 6 feet 8 inches measured from the floor, is of screen material. These Arizona rooms shall be used only for recreational, outdoor living purposes and not as storage or habitable rooms. The covered roof portion of this structure, whether previously constructed, or constructed while building the Arizona room, shall be designed for a live load of 20 psf. Exterior openings required for light and ventilation shall be permitted to open into the Arizona room.

The City of Chandler does not permit an Arizona room enclosed with windows or a combination of walls and windows as non-habitable space. If you would like to enclose your patio, see the information for room additions. An enclosed patio is considered habitable space and shall comply with all code requirements for habitable space.

Remodeling

A permit is needed for remodeling work not listed as exempt on page 7 of this manual. Remodeling projects typically need to comply with the same requirements listed for room additions. See page 34 of this manual.

Roofing

You need to get a permit to re-roof your house when you are:

- Replacing the old roofing material with a different material such as concrete tile. An engineering analysis is required to determine if the existing roof assembly will withstand the additional loads.
- Replacing the old roofing with like material that already exceeds two layers.

Stucco

You need to get a permit to stucco your house or accessory building:

- "One-coat" Stucco systems require a permit and inspection under all circumstances. The building inspector will need to see that the installation contractor is a licensed applicator. Provide an ICC-ES report for the one-coat stucco when applying for a permit. See http://www.icc-es.org/.
- Other stucco systems, such as a three-coat system, require a permit so that the inspectors can ensure that the lath ("chicken wire") and other components are properly installed.

- The only time a permit is not required for a stucco system is if the stucco is being directly applied (no lath) to CMU walls.

Fireplaces

It shall be unlawful for anyone to construct, install, convert, or alter any fireplace, stove or any other recreational or aesthetic solid fuel burning devise unless such device and its installation is certified by a nationally recognized testing agency as satisfying the requirements of 40 Code of Federal Regulations, Part 60, Subpart AAA as in effect on July 1, 1990.

Definitions

Effective date means December 31, 1998.

Fireplace means a built-in-place masonry hearth and fire chamber or a factory-built appliance, designed to burn solid fuel or to accommodate a gas or electric log insert or similar device, and which is intended for occasional recreational or aesthetic use, not for cooking, heating or industrial processes.

Solid fuel includes, but is not limited to, wood, coal or other nongaseous or non-liquid fuels, including those fuels defined by the Maricopa County Air Pollution Control Officer as “inappropriate fuel” to burn in residential wood burning devices.

Woodstove means a solid fuel burning heating appliance including a pellet stove, which is either freestanding or designed to be inserted into a fireplace.

Installation Restrictions

All fireplaces or woodstoves constructed on or after 12-31-98 must be one of the following:

1. A fireplace that has a permanently installed gas or electric log insert.
2. A fireplace, woodstove or other solid fuel burning appliance which has been certified by the Unites States Environmental Protection Agency as conforming to 40 Code of Federal Regulations Part 60, Subpart AAA as in effect on July 1, 1990.
3. A fireplace, woodstove or other solid fuel burning appliance which has been tested and listed by a nationally recognized testing agency to meet performance standards equivalent to those adopted by 40 Code of Federal Regulations Part 60, Subpart AAA as in effect on July 1, 1990.
4. A fireplace, woodstove or other solid fuel burning appliance that has been determined by the Maricopa County Air Pollution Control Officer to meet

performance standards equivalent to those adopted by 40 Code of Federal Regulations Part 60, Subpart AAA as in effect on July 1, 1990.

5. A fireplace that has a permanently installed woodstove insert, which complies with subsection 2, 3 or 4 above.

In addition to the provisions and restrictions of this section, the construction, installation or alteration of all fireplaces, woodstoves and other gas, electric or solid-fuel burning appliances and equipment shall be done in compliance with the provisions of the construction code and shall be subject to the permits and inspections required by the construction code.

Alterations

On or after the effective date, it shall be unlawful to:

- Alter or remove a gas or electric log insert or a woodstove insert from a fireplace for the purpose of converting the fireplace to directly burn wood or other solid fuel.
- Alter a fireplace, woodstove or other solid fuel-burning appliance in any manner that would void its certification or operational compliance with provisions of this article.

Exemptions

The following installations are not regulated by this section and are not prohibited by this section:

- Furnaces, boilers, incinerators, kilns and other similar space heating or industrial process equipment.
- Cook-stoves, barbeque grills and similar appliance designed primarily for cooking.
- Fire pits, barbeque grills and other outdoor fireplaces.

Room Additions

A room addition is defined as any space added on to an existing dwelling, including the enclosure of an existing covered area, such as a patio cover. Prior to submitting for permit, please speak with a Planner to determine zoning building setbacks, lot coverage, and architectural design requirements for the residential subdivision. Many residential development's housing products were required to provide a standard rear yard covered patio attached to the home thus closing in a patio cover requires adding another patio cover to the home in order to meet zoning requirements.

To obtain a building permit, please submit:

- Completed application.
- Two copies of the plot plan showing the house on the lot and the proposed room addition with distances to property lines.
- Foundation plans, wall details and exterior elevations.
- Existing and proposed dimensioned floor plan showing windows and sizes, location of plumbing fixtures, electrical outlets, heating, lighting and smoke alarms.

The addition must be architecturally integrated with the existing residence such as building materials, paint color, roofing type, and architectural design. It should not detract from the surrounding residences.

The drawings need to clearly indicate the wall and roof covering and color on the existing residence as well as the proposed addition. You must provide elevation drawings showing both the existing residence as well as the proposed addition.

Show the footing size on your wall section. Continuous footings are a minimum of 12 inches wide and a minimum of 12 inches below grade. The sill plate shall be a minimum of 6 inches above grade.

Typically, any room (other than a bathroom or kitchen) that has a closet shall be considered a sleeping room and will need to meet all sleeping room requirements.

Sleeping rooms, as well as the area outside of sleeping rooms, are required to have smoke alarms. When interior alterations, repairs or additions requiring a permit are made, or when one or more sleeping rooms are added or created in existing dwellings, the individual dwelling unit shall be provided with smoke alarms located as required for new dwellings. Smoke alarms and Carbon monoxide detectors are required when performing Interior work that requires a permit, except work such as plumbing or mechanical (air conditioning). If they are not pre-existing throughout the whole house,

they must be added. Dual (CO & Smoke) alarms are available. They will be required to be interconnected. Ask your inspector.

Any main door to the outside must have a landing. The width of each landing shall not be less than the door served. Every landing shall have a minimum dimension of 36 inches measured in the direction of travel.

A switched exterior light is required at the exterior side of each exterior door.

Any wood framed non-bearing wall to be added above an existing slab may not need its own footing. It shall have a bottom plate of treated wood or wood of natural resistance to decay. This bottom plate must be fastened to the slab in an approved manner and must be a minimum of 6 inches above an adjacent unfinished exterior grade.

Any wood framed bearing wall shall have its own footing, a bottom plate of treated wood or wood of natural resistance to decay, must be secured in an approved manner and must be a minimum of 6 inches above an adjacent unfinished exterior grade.

If you plan to use engineered roof trusses on your project, you must submit sealed engineered roof truss calculations or the roof truss design review waiver with your permit application. The waiver requires the seal of a State of Arizona registered architect or engineer. Provide a complete floor plan of the room adjacent to the proposed room addition. Indicate the size of the existing room, the size and location of all exterior doors and windows. If you propose to remove or cover existing windows, this information must be included in your drawings.

Provide every dwelling unit with heating facilities capable of maintaining a minimum room temperature of 68°F at a point 3 feet above the floor and 2 feet from exterior walls in all habitable rooms. Portable space heaters shall not be used to achieve compliance with this requirement. Indicate how the required heating will be provided.

At least one wall switch-controlled lighting outlet shall be installed in every habitable room and bathroom.

Install receptacle outlets so that no point along the floor line in any wall space is more than 6 feet (measured horizontally) from an outlet in that space.

All branch circuits that supply 125-volt, single-phase, 15- and 20-ampere outlets installed in all habitable rooms shall be protected by an arc-fault circuit interrupter. Also, all new 15 and 20V receptacles shall be tamper-proof except receptacles located more than 5.5 feet above the floor, receptacles that are part of a luminaire or appliance, or receptacles dedicated to refrigerators or freezers (appliances not easily moved).

A receptacle outlet shall be installed at each kitchen wall counter space 12 inches or wider. Receptacle outlets shall be installed so that no point along the wall line is more than 24 inches measured horizontally from a receptacle outlet in that space. Exception:

Receptacle outlets shall not be required on a wall directly behind a range or sink. At least one receptacle outlet shall be installed at islands and peninsulas with a long dimension of 24” or greater and a short dimension of 12” or greater. All 125 volt 15- and 20-amp receptacle outlets serving kitchen countertop spaces shall have Ground-fault circuit interrupters (GFCI) protection. GFCIs shall be installed in a readily accessible location. For example, the GFCI protector may not be behind a refrigerator.

All 125-volt, single phase, 15- and 20-ampere receptacles installed outdoors shall have GFCI protection.

At least one wall receptacle outlet shall be installed in bathrooms. It must be located within 36 inches of the outside edge of each lavatory basin. The receptacle outlet shall be located on a wall that is adjacent to the lavatory basin location. All 125-volt, single-phase, 15- and 20-ampere receptacles installed in bathrooms shall have GFCI protection.

Provide a panel schedule showing the existing and new breakers if you propose adding a sub-panel. Load calculations may also be required. (See Appendix B at the back of this booklet for a calculation form that you can use to simplify the process.)

Every sleeping room shall have at least one operable emergency escape and rescue opening.

- If the opening is a window, it shall have an opening height of not more than 44 inches above the floor.
- Emergency escape and rescue openings above or below grade floor shall have a minimum net clear opening of 5.7 square feet.
- Grade floor openings shall have a minimum net clear opening of 5 square feet.
- The minimum net clear opening height shall be 24 inches.
- The minimum net clear opening width shall be 20 inches.
- Emergency escape and rescue openings shall be operational from the inside of the room without the use of keys or tools.

Enclosed attics and enclosed rafter spaces formed where ceilings are applied directly to the underside of the roof rafter shall have cross ventilation for each separate space by ventilating openings protected against the entrance of rain or snow. Ventilating openings shall be provided with corrosion-resistant wire mesh, with ⅛-inch minimum to ¼-inch maximum openings.

The total net free ventilating area shall be not less than to 1 to 150 of the area of the space ventilated, except that the total area is permitted to be reduced to 1 to 300, if at least 40 percent and not more than 50 percent of the required ventilating area is provided by ventilators located in the upper portion of the attic or rafter space. Upper ventilators shall

be located no more than 3 feet below the ridge or highest point of the space, measured vertically, with the balance of the required ventilation provided by eave or cornice vents. Where the location of wall or roof framing members conflicts with the installation of upper ventilators, installation more than 3 feet below the ridge or highest point of the space shall be permitted.

You must include roof vent calculations in your drawings.

Please provide a water meter work sheet if you are adding plumbing fixtures (see Appendix A for an example). This information must be on the plans, not a separate sheet.

Any addition of conditioned space shall meet the minimum energy efficiency requirements of Chapter 11 of the International Residential Code. (Compliance with Chapter 4 of the International Energy Conservation Code is also acceptable.) Following are the minimum requirements from Table N1102.1 of the International Residential Code:

□	Windows/Skylights	U-Factor	.40/.60
□	Windows/Skylight	Solar Heat Gain Coefficient	.25/.25
□	Ceiling	R-Value	38
□	Wood Frame Wall	R-Value	13
□	Mass Wall	R-Value	4/6
□	Floor	R-Value	13

For existing buildings, the thermal envelope shall be durably sealed to limit infiltration. The following shall be caulked, gasketed, weather-stripped, or otherwise sealed. For new construction, testing is required.

- All joints, seams, and penetrations.
- Site-built windows, doors, and skylights.
- Openings between window and door assemblies and their respective jambs and framing.
- Utility penetrations.
- Dropped ceilings or chases adjacent to the thermal envelope.
- Knee walls.
- Walls and ceilings separating the garage from conditioned spaces.
- Behind tubs and showers on exterior walls.

- Common walls between dwelling units.
- Other sources of infiltration.
- Tile backer (dens-shield) at showers. No green board allowed.

Supply and return ducts shall be insulated to a minimum of R-8. Mechanical system piping capable of carrying fluids and circulating hot water systems shall be insulated to a minimum of R-2. A permanent certificate shall be posted at the residence. The certificate shall be completed by the builder or registered design professional. The certificate shall list the predominant R-values of insulation installed in or on ceiling/roof, walls, foundation, and ducts outside conditioned spaces; U-factors for fenestration; and the solar heat gain coefficient (SHGC) of fenestration (windows/glass doors/skylights). Where there is more than one value for each component, the certificate shall list the value covering the largest area. The certificate shall list the type and efficiency of heating, cooling, and service water heating equipment.

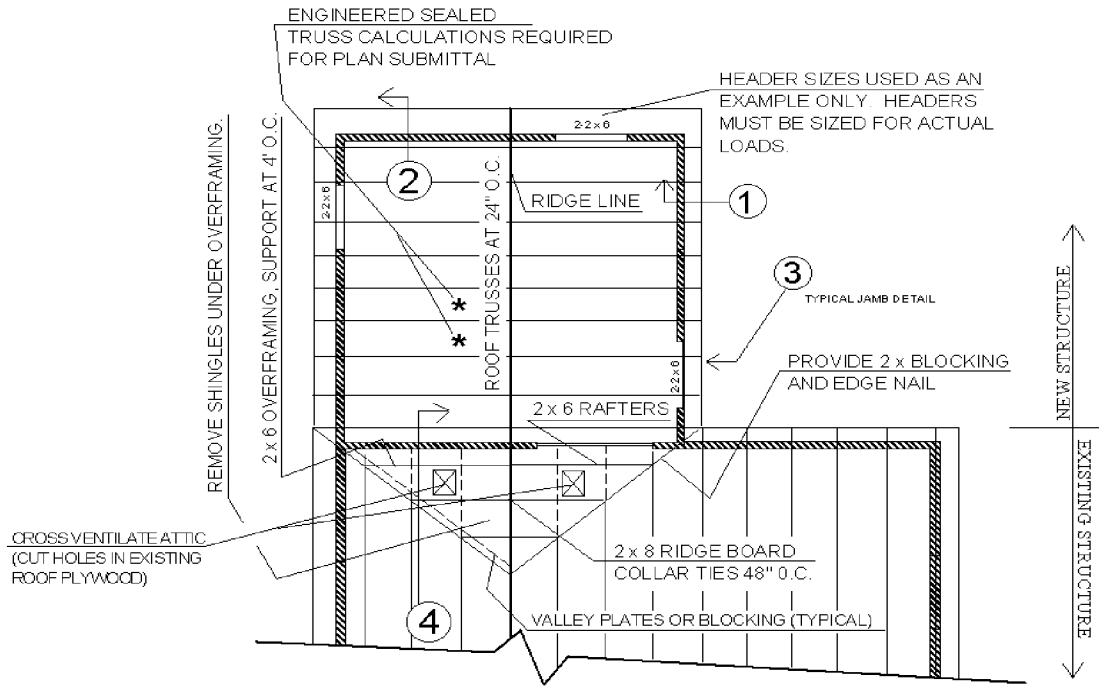

ROOF FRAMING AT ADDITION TO EXISTING BUILDING

SCHEMATIC, NOT FOR CONSTRUCTION, NOT TO SCALE

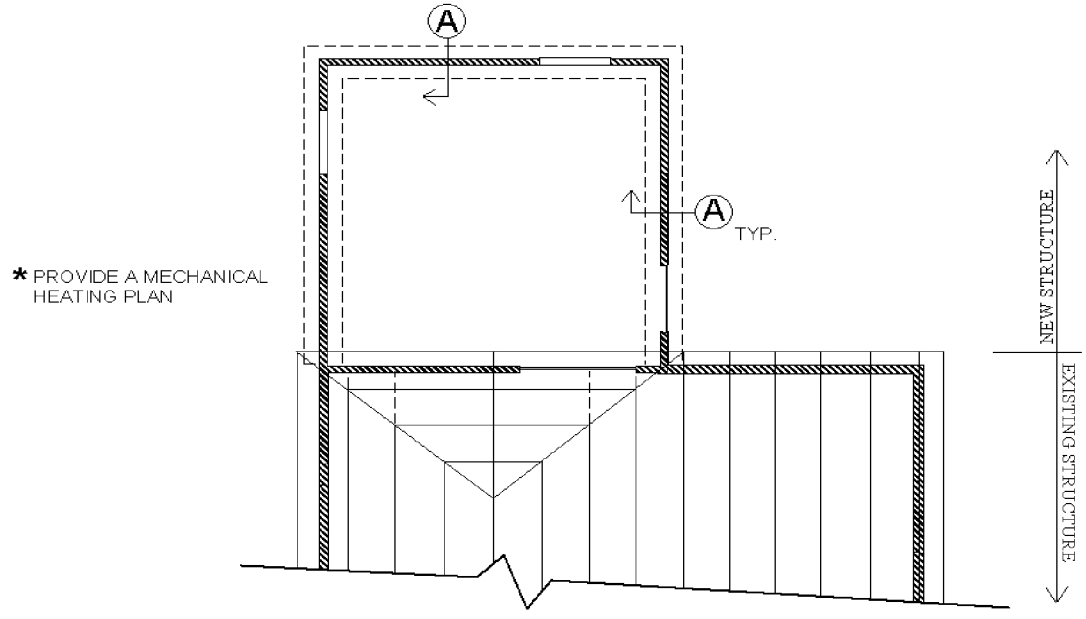

FOUNDATION PLAN FOR ROOM ADDITION

SCHEMATIC, NOT FOR CONSTRUCTION, NOT TO SCALE

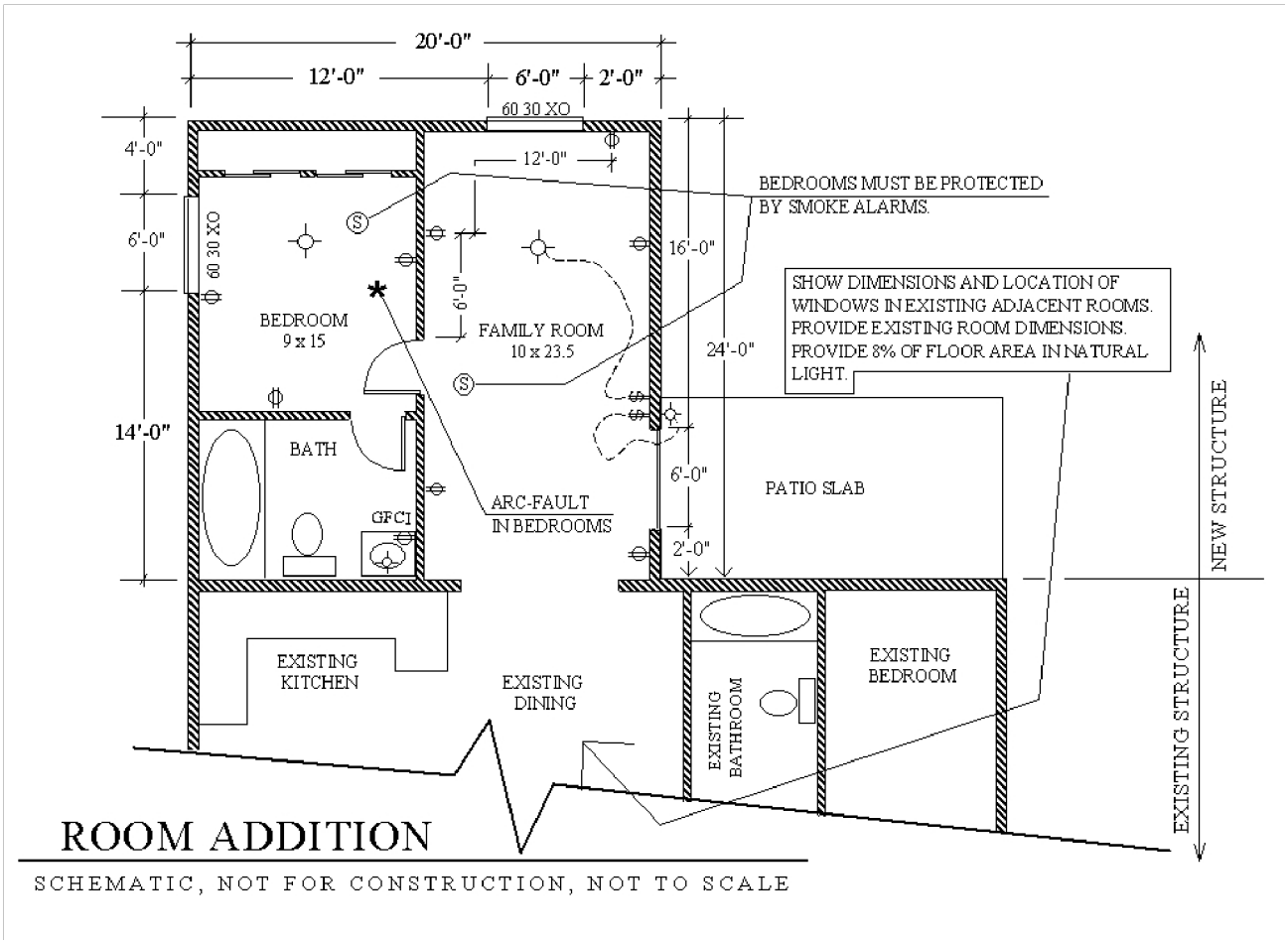
20'-0"
12'-0"
6'-0"
2'-0"
60 30 XO
4'-0"
6'-0"
14'-0"
12'-0"
BEDROOMS MUST BE PROTECTED BY SMOKE ALARMS.
60 30 XO
BEDROOM 9 x 15
6'-0"
FAMILY ROOM 10 x 23.5
16'-0"
24'-0"
SHOW DIMENSIONS AND LOCATION OF WINDOWS IN EXISTING ADJACENT ROOMS. PROVIDE EXISTING ROOM DIMENSIONS. PROVIDE 8% OF FLOOR AREA IN NATURAL LIGHT.
BATH
GFCI
ARC-FAULT IN BEDROOMS
6'-0"
PATIO SLAB
2'-0"
NEW STRUCTURE
EXISTING KITCHEN
EXISTING DINING
EXISTING BATHROOM
EXISTING BEDROOM
EXISTING STRUCTURE
ROOM ADDITION
SCHEMATIC, NOT FOR CONSTRUCTION, NOT TO SCALE

Swimming Pools and Spas

Definition: Per the City municipal code, a swimming pool is any body of water with a depth greater than 18 inches.

All pools and spas require a permit, whether constructed above or below ground (other than those referenced in item 7 on page 7 of this manual).

Pool engineering plans, stamped and sealed by an engineer, are required on all custom in ground pools and spas. Plans are required on all pre-manufactured above ground pools and spas.

Swimming pools shall not occupy any front yard.

A pool or cool decking cannot be constructed across a property line.

An engineered surcharge design is required for in-ground pools built closer than 5 feet to a building foundation.

Pool equipment must be 5 feet from the water's edge.

Prior to construction, all easements must be cleared by the utility companies.

Any glazing within 5 feet of the water's edge where the bottom edge of the glazing is less than 60 inches above grade must be safety glazed. Tinting film may not be used to satisfy this requirement.

Pool Barrier Guidelines

Please note: the pool barrier requirements must be met whether or not children of any age are living at the dwelling.

Barrier

Pool barriers shall be an interior fence, perimeter wall, building wall or a combination thereof, which surrounds the swimming pool. The top of the exterior barrier, including all gates and doors therein, shall not be less than 6 feet above finished floor or finished grade measured on the exterior side of the enclosure. An interior barrier separating a dwelling from a pool may be 4 feet in height.

There shall be no horizontal or vertical openings, holes, or gaps in the interior barrier large enough for a sphere 4 inches in diameter to pass through. The maximum vertical clearance between grade and the bottom of the barrier shall be 2 inches measured on the side of the barrier that faces away from the pool.

A barrier fence or wall shall have no handholds, footholds, or horizontal members accessible from the exterior side of the enclosure. Horizontal members of fences shall be spaced not less than 45 inches apart measured vertically or shall be placed on the pool side of a fence which has no opening greater than 1¾ inches measured horizontally. Wire mesh or chain link fences shall have a maximum mesh size of 2 ¼ inches square.

In addition, the exterior fence enclosure for swimming pools (as required by Chapter 35 Section 2205 of the City Code) need not necessarily be located on the side or rear property lines but can be within property boundaries. Exterior fencing can be a masonry or concrete wall, decorative fencing (such as wrought iron), or a durable wire mesh as along as the spacing between horizontal and vertical members does not exceed one and three-quarter (1 ¾) inches.

Gates and Doors

All pedestrian access gates in a pool barrier shall be self-closing and self-latching and must open outward from the pool. Gate latches shall be located not less than 54 inches above finished grade or shall otherwise be made inaccessible from the outside by small children. (See Graphic B on page 45 at end of this section).

All exterior hinged or sliding doors leading from a dwelling unit, bedroom, garage or storage room directly into a swimming pool enclosure shall be self-closing or shall be equipped with audible alarms. Hinged doors shall open away from the pool area.

Self-closing devices shall consist of one of the following:

- Spring loaded hinges.

- Pneumatic closures (without stops).
- Approved sliding glass door closures.

Latching mechanisms shall consist of one of the following:

- Passage lock located 54 inches above the finished floor.
- Double cylinder gate latch installed at any height, provided the door is not required for emergency egress.
- Sliding glass door latches shall be located 54 inches above the finished floor.

Alarms shall produce an audible warning when the door and/or its screen, if present, are opened. The alarm shall be listed in accordance with UL 2017. The alarm deactivation has to be 54" above finish floor.

If a pet door is large enough that a sphere 4 inches in diameter will pass through and is located in any wall of the dwelling that forms a part of the interior barrier, it must be able to be rendered unusable with a latching device inoperable by young children so the slide portion of the pet door cannot be removed.

Windows

All windows facing on a swimming pool enclosure shall be equipped with a latching device.

For emergency escape or rescue windows, the latching device shall be located not less than 54 inches above the finished floor.

For all other operable dwelling unit or garage windows, the latching device shall consist of one of the following:

- A keyed lock that prevents opening the window more than 4 inches.
- A screwed-in-place wire mesh screen.
- A latching device located not less than 54 inches above the finished floor.

Above Ground Swimming Pools

All above ground pools, with non-climbable sides not less than 48 inches high above the finished grade, may be located on a single-family residential property without requiring an interior fence, wall or barrier between the pool and the dwelling. Where an aboveground pool structure is used as a barrier or where the barrier is mounted on top of the pool structure, and the means of access is a ladder or steps, then the ladder or steps either shall be capable of being secured, locked or removed to prevent access, or the ladder or steps shall be surrounded by a barrier that meets the requirements of an in-ground pool.

When the ladder or steps are secured, locked or removed, any opening created shall not allow the passage of a 4-inch-diameter sphere.

Entrapment Avoidance

Suction outlets shall be designed to produce circulation throughout the pool or spa. Single outlet systems, such as automatic vacuum cleaner systems, or other such multiple suction outlets whether isolated by valves or otherwise shall be protected against user entrapment.

No one needs to be home for the first inspection, which is the pre-gunite inspection. PLANS AND PERMIT MUST BE AVAILABLE.

The homeowner must be present for the second inspection (pre-plaster inspection) if the house forms part of the interior barrier around the pool or there is no interior pool fence. However, if an interior fence encompasses the entire pool, then the homeowner does not need to be present for the second inspection.

All electrical service panels must be left unlocked for the inspector.

Inspections that require entry into the home will not be conducted unless a responsible adult is present.

Required Inspections

This section lists the minimum inspections required by the City of Chandler. Please consult your Building Inspector for all required inspections specific to your project. A map of inspection areas and Building Inspectors contact information can be found online at:

https://www.chandleraz.gov/government/departments/development-services/building-safety-plan-review-permits-and-inspections

To schedule an inspection, see pages 5 or 6 of this manual, or refer to the back of your inspection card at least one business day in advance of when the inspection is needed. An inspector will visit the property and either provide an approval or a correction notice. The building inspector must approve all work before construction can proceed to the next level. All work to be inspected must be accessible and exposed.

	Type of Inspection	Request Inspection When:
1.	Footings	All forms, reinforcing steel and UFER ground are in place. An additional inspection is required for stems poured separately.
2.	Monolithic footing	Reinforcing steel, UFER, forms and accessories are in place, but not covered.
3.	Stem wall	Forms are aligned and staked, grade pins installed and reinforcing steel is in place.
4.	Plumbing (groundwork)	The under-floor building drain is installed, shaded and under pressure test, but not covered.
5.	Water piping (groundwork)	All under-floor water piping is installed, but not covered.
6.	Building sewers (the sewer piping connecting the building with the private sewer or the public sewer)	Pipes are installed, shaded and properly supported, but not covered.
7.	Water service (the water yard piping from the city water meter to the building)	Pipes are installed and under pressure, but not covered.
8.	Upper-level drainage	Tubs are filled to flood rim.

9. Strap and shear	All shear panels and mechanical fasteners are installed, but not covered.

Note: inspections 10 through 13 are typically done concurrently.

10. Rough electrical	All rough-in electrical is installed, but not covered
11. Rough plumbing	All rough-in plumbing is installed and under pressure test, but not covered.
12. Rough heating and ventilation	All rough-in mechanical work is installed, but not covered. (Groundwork – request inspection when ductwork is installed, but not covered).
13. Framing	The building is “dried in” and all framing members, gussets, shear panels, anchors and all plumbing, mechanical and electrical rough ins are in place, but not covered.
14. Wallboard	The wallboard is installed and nailed, but not filled or taped.
15. Lath inspection	All substrate wire mesh and trim are installed and ready to receive stucco, but not covered.
16. Electric (groundwork)	The conduit is installed, but not covered.
17. Final Inspection	The building is completed to the requirements of the approved plans, specifications, and the City of Chandler Codes.

Appendix A
Water Meter Worksheet

Fixture	**Number**	**Value**	**Total**
Water Closet (tank type)		x 2.2	
Shower Stall		x 1.4	
Bathtub (with/without overhead shower head)		x 1.4	
Lavatory		x 0.8	
Kitchen Sink		x 1.4	
Dishwasher		x 1.4	
Hose Bibs (count all)		x 2.5	
Laundry or Utility Sink		x 1.4	
Automatic Clothes Washer		x 1.4	
If you use a full bath group, do not count the individual fixtures.			
Full Bath Group (with/without shower head or shower stall)		x 3.6	
Half Bath Group (water closet and lavatory)		x 2.6	
Kitchen Group (dishwasher and sink with/without garbage grinder)		x 2.5	
Laundry Group (clothes washer standpipe and laundry tub)		x 2.5	
Total Fixture Units			

Total developed length of the water line from the water meter to the furthest water-using fixture unit. (**Note:** this is usually the hose bib at the rear of the home). Total distance: _____ feet

Indicate the size of the existing water meter and supply size. NOTE: The minimum water meter size for new construction is 1 inch.

Meter size _____

Supply size _____

Note: for a room addition, please include both the existing and new on this sheet.

Appendix B
Electrical Load Calculation Worksheet

OPTIONAL CALCULATION – EXISTING DWELLING UNIT. (NEC SECTION 220.82/IRC E3602.2).

For a dwelling unit having the total connected load served by a single 3-wire, 120/240 volt set of service entrance or feeder conductors with an ampacity of 100 or greater.

LIVABLE SQUARE FOOTAGE _____ SF @ 3= _____ VA

SMALL APPLIANCE CIRCUITS (2 minimum) _____@ 1500 = _____

LAUNDRY CIRCUIT (Required in new dwelling: 1500) = _____

ELECTRIC DRYER (Nameplate rating or 5,000) = _____

ELECTRIC RANGE (Nameplate rating or 12,000) = _____

COOKTOP & OVEN (Nameplate rating or 6,000 each) = _____

MICROWAVE OVEN (Dedicated circuit: 1200) = _____

DISHWASHER (W or W/) Disposer on circuit: 1500) = _____

DISPOSER (Separate dedicated circuit: 720) = _____

ELECTRIC WATER HEATER (Nameplate or 4,500) = _____

OTHER _____ _____

SUBTOTAL = _____ VA

FIRST 10 KVA @100% = 10,000_____

REMAINDER @ 40% = _____

SUBTOTAL = _____ VA

DIVIDED BY 240 V = _____AMPS

AIR CONDITIONING = _____AMPS

POOL PUMP = _____AMPS

TOTAL = _____AMPS

REQUIRED SERVICE _____AMPS

Appendix C

Building Permit Application (Next Page)

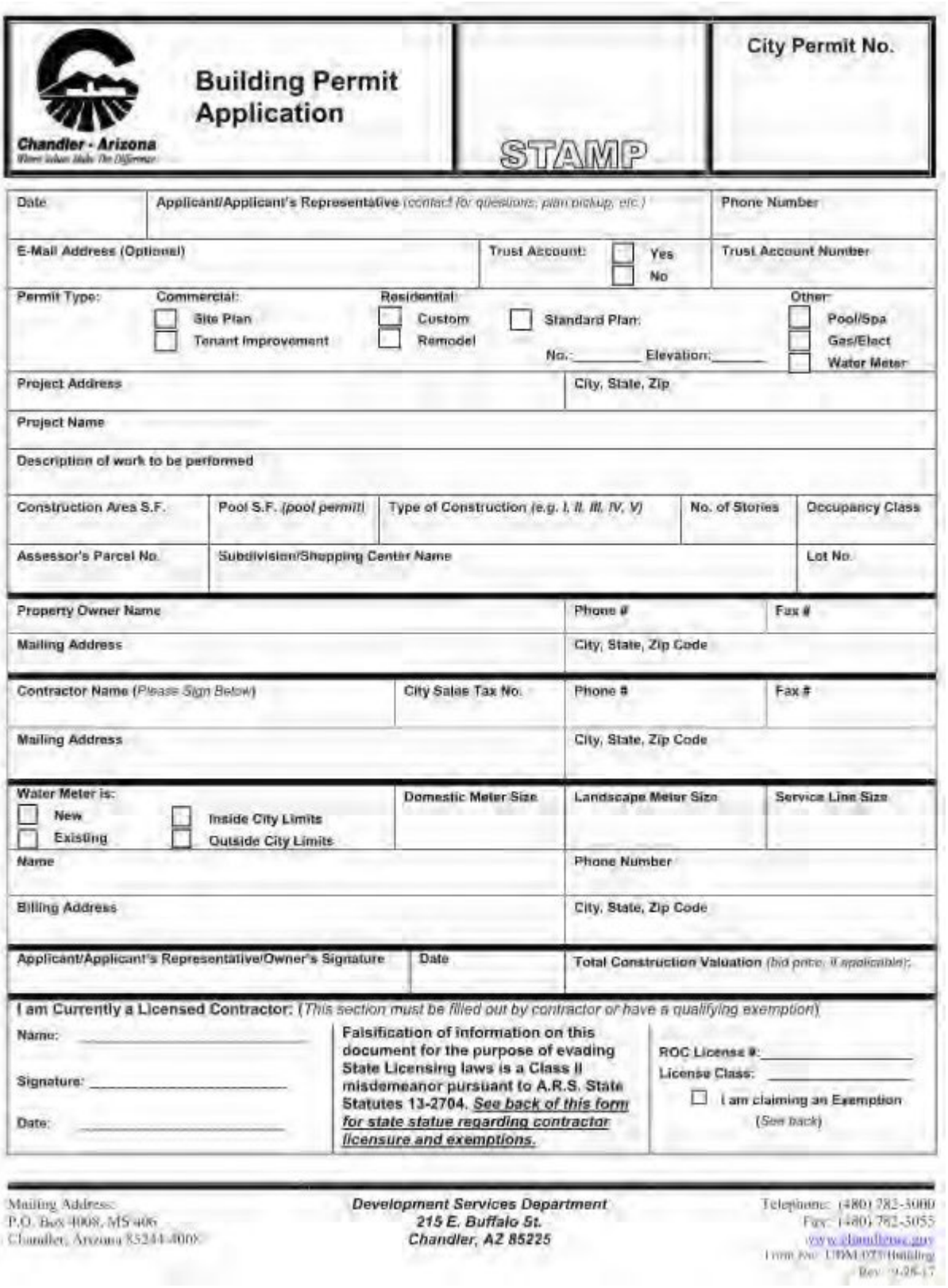

Chandler - Arizona
Where Values Make The Difference

Building Permit Application

STAMP

City Permit No.

Date	Applicant/Applicant's Representative *(contact for questions, plan pickup, etc.)*	Phone Number
E-Mail Address (Optional)	Trust Account: ☐ Yes ☐ No	Trust Account Number

Permit Type:
- Commercial: ☐ Site Plan ☐ Tenant Improvement
- Residential: ☐ Custom ☐ Remodel ☐ Standard Plan: No.:_____ Elevation:_____
- Other: ☐ Pool/Spa ☐ Gas/Elect ☐ Water Meter

Project Address	City, State, Zip
Project Name	
Description of work to be performed	

Construction Area S.F.	Pool S.F. *(pool permit)*	Type of Construction *(e.g. I, II, III, IV, V)*	No. of Stories	Occupancy Class
Assessor's Parcel No.	Subdivision/Shopping Center Name			Lot No.

Property Owner Name	Phone #	Fax #
Mailing Address	City, State, Zip Code	

Contractor Name *(Please Sign Below)*	City Sales Tax No.	Phone #	Fax #
Mailing Address		City, State, Zip Code	

Water Meter is: ☐ New ☐ Existing ☐ Inside City Limits ☐ Outside City Limits	Domestic Meter Size	Landscape Meter Size	Service Line Size
Name		Phone Number	
Billing Address		City, State, Zip Code	

Applicant/Applicant's Representative/Owner's Signature	Date	Total Construction Valuation *(bid price, if applicable)*:

I am Currently a Licensed Contractor: *(This section must be filled out by contractor or have a qualifying exemption)*

Name: _____

Signature: _____

Date: _____

Falsification of information on this document for the purpose of evading State Licensing laws is a Class II misdemeanor pursuant to A.R.S. State Statutes 13-2704. *See back of this form for state statue regarding contractor licensure and exemptions.*

ROC License #: _____

License Class: _____

☐ I am claiming an Exemption *(See back)*

Mailing Address:
P.O. Box 4008, MS 406
Chandler, Arizona 85244-4008

Development Services Department
215 E. Buffalo St.
Chandler, AZ 85225

Telephone: (480) 782-3000
Fax: (480) 782-3055
www.chandlerac.gov
Form No. UDM-073/Building
Rev. 9-28-17

EXEMPTION FROM LICENSING

I am exempt from Arizona contractors' license laws on the basis of the license exemptions contained in Arizona Revised Statutes 32-1121A., as marked below.

A.R.S. State Statute 32-1121; Persons not required to be licensed; Penalties.

☐ 32-1121A.5 Owners of property who improve such property or who build or improve structures or appurtenances on such property and who do the work themselves, with their own employees or with duly licensed contractors, if the structure, group of structures of appurtenances, including the improvements thereto, are intended for occupancy solely by the owner and are not intended for occupancy by members of the public as the owner's employees of business visitors and the structures of appurtenances are not intended for sale or for rent. In all actions brought under this chapter, proof of the sale or rent or the offering for sale or rent of any such structure by the owner-builder within one year after completion or issuance of a certificate of occupancy is prima facie evidence that such project was undertaken for the purpose of sale or rent. For the purposes of this paragraph, "sale" or 'rent' includes any arrangement by which the owner receives compensation in money, provisions, chattels or labor from the occupancy of the transfer or the property or the structures on the property.

☐ 32-1121A.6 Owners of the property who are acting as developers and who build structures of appurtenances to structure on their property for the purpose of sale or rent and who contract for such a project with a general contractor licensed pursuant to this chapter and owners of property who are acting as developers, who improve structures or appurtenances to structures on their property for the purpose of sale or rent and who contract for such a project with a general contractor or specialty contractors licensed pursuant to this chapter. To qualify for the exemption under this paragraph, the licensed contractors' names and license numbers shall be included in all sales documents.

☐ 32-1121A.14 Any person other that a licensed contractor engaging in any work or operation on one undertaking or project by one or more contracts, for which the aggregate contract price, including labor, materials and all other items, but excluding any electrical fixture or appliance that was designed by the manufacturer, that is unaltered, unchanged or unmodified by any person, that can be plugged into a common household electrical outlet utilizing a two pronged or three pronged electrical connector and that does not use any other form of energy, including natural gas, propane or other petroleum or gaseous fuel, to operate or is attached by a nail, screw or other fastening device to the frame or foundation of any residential structure, is less than one thousand dollars. The work or operations which are exempt under this paragraph shall be of a casual or minor nature.

This exemption does not apply:

(a) In any case in which the performance of the work requires a local building permit.
(b) In any case in which the work or construction is only a part of a larger or major operation, whether undertaken by the same or a different contractor, or in which a division of the operation is made in contracts of amounts less than one thousand dollars, excluding any electrical fixture or appliance that was designed by the manufacturer, that is unaltered, unchanged or unmodified by any person, that can be plugged into a common household electrical outlet utilizing a two pronged or three pronged electrical connector and that does not use any other form of energy, including natural gas, propane or other petroleum or gaseous fuel, to operate or is attached by a nail, screw or other fastening device to the frame or foundation of any residential structure, for the purpose of evasion of this chapter or otherwise.
(c) To a person who utilizes any form of advertising to the public in which the person's unlicensed status is not disclosed by including the words "not a licensed contractor" in the advertisement.

I will be using the following licensed contractors on this project:

General Contractor _____ License No. ROC _____ Class _____

Mechanical Contractor _____ License No. ROC _____ Class _____

Electrical Contractor _____ License No. ROC _____ Class _____

Plumbing Contractor _____ License No. ROC _____ Class _____

Other Contractor _____ License No. ROC _____ Class _____

Applicant/Owner Signature _____ Date _____