3.0 Transportation and Circulation Element

The Transportation and Circulation Element of the Santan Area Plan is presented in the following sections:

3.1 Introduction
3.2 Existing Setting
3.3 Transportation and Circulation Plan Vision, Goals, Objectives, and Policies
3.4 Transportation and Circulation Plan
3.5 Transportation and Circulation Implementation Program

3.1 Introduction

Construction of the Santan Freeway will have dramatic impact on the nature of future development within the Study Area. This component of the Regional Freeway System will facilitate a significant amount of traffic into the City of Chandler. Planned interchanges at one-mile intervals will allow for the efficient movement of traffic throughout the roadway network, increasing potential for employment and residential development. In addition to the network, additional transportation elements exist within, or proximate to, the Study Area. The Chandler Municipal Airport, located southeast of the Study Area, is continuing to expand its service capacity, becoming one the region's strategic fixed-base operation facilities. The Union Pacific Railroad, while currently underutilized as a regional transportation element, may experience renewed activity for heavy and light rail transport. Full development of the identified transportation and circulation network will ensure access and mobility to commuters throughout the Study Area.

The Transportation and Circulation Element is a guide to decision making for the Santan Area that:

- Identifies the needs of the Study Area for development of transportation-related facilities,
- Recommends transportation-related development priorities, and
- Ensures managed growth within the Study Area that is compatible with the existing Transportation Plan Element.

3.2 Existing Setting

The circulation network within the Study Area consists of primarily two-lane improved roadways, established on a one-mile grid system. These roadways define the arterial roadway system and promote efficient traffic movement through the Study Area.

Roadway of regional significance within the Study Area is Arizona Avenue (State Route 87). Arizona Avenue, the primary north-south roadway in the City and runs though the downtown area. It is also the dominant connector roadway between the southeast Chandler and the City of Mesa. The Price Road/Freeway also plays a large role in the movement of traffic through the Price Road Employment Corridor.

Roadways within the Study Area that have undergone improvements to meet the roadway design standards established by the City of Chandler include Arizona Avenue, a six-lane facility. Each of the arterial roadways in the Study Area share an ultimate buildout right-of-way of 130 feet for inclusion of six traffic lanes, bike lanes adjacent to both curbs, a raised and landscaped median and setback sidewalk with landscaped buffering. Median breaks at mid-block locations allow for left turn movement and major intersections are flared to incorporate dedicated right turn lanes and dual left turn lanes.

Pedestrian movement within the Study Area is restricted by a lack of urban facilities such as dedicated sidewalks, linkages and other amenities. A majority of the local arterial roadways have not been programmed as high priority improvement projects that would include sidewalks and bike lanes adjacent to the roadway.

3.3 Transportation/Circulation Plan Vision, Goals, Objectives, and Policies

Vision Statement:
Develop and maintain a multi-modal circulation system that integrates multiple levels of local and regional serviceability through the encouragement of network continuity and adherence to Chandler roadway design guidelines and standards.

Freeway Interchange Nodes
Objective: To promote an appropriate level of serviceability at freeway interchange locations so as to enhance community and economic opportunities within the Study Area.

- The City shall encourage the development of high intensity employment and retail commercial uses adjacent to freeway corridors with proper access, density transitions and buffering.

Functional Roadway Network
Objective: To evaluate existing and projected roadway requirements within the Study Area, to establish a quantitative needs assessment for the future circulation network.

- The City shall require developers to utilize minor arterial and collector roadways to adequately service property access and building orientation.

- The City shall require the construction of all streets in an orderly and logical progression. This includes ensuring that collector streets in all new developments are planned to connect with collector streets in existing and planned adjacent development.

Access Control

Objective 3.1

To create an environment conducive to traffic circulation and movement throughout the Santan Freeway Corridor Study Area without negatively impacting access to properties.

Policy 3.1.1 The City shall encourage parcel access in high intensity areas adjacent to freeway interchanges, to be oriented onto collector and internal roadways with planned access onto arterial roadways.

Policy 3.1.2 The City shall encourage land uses adjacent to the freeway corridor that minimize traffic access points and controlled intersections.

Policy 3.1.3 The City shall require access and frontage for multi-family residential uses to be oriented to collector and local streets.

Policy 3.1.4 The City should regulate median breaks and driveway spacing in close proximity to the freeway interchanges.

Pedestrian/Bicycle Orientation

Objective 3.2

To promote increased accessibility and safety for pedestrian and bicycle oriented transportation throughout the Study Area.

Policy 3.2.1 The City will encourage retail and residential developers to incorporate pedestrian and bicycle oriented design characteristics into site plans.

Policy 3.2.2 The City shall enhance pedestrian and bicycle oriented facilities by requiring proposed developments to address issues related to community linkages and enhancement.

Policy 3.2.3 The City shall encourage the development of integrated pedestrian, bicycle and equestrian trails along the Paseo System.

Policy 3.2.4 The City shall require that all arterial roadways include a bicycle lane for each direction of traffic flow, as per City standards adopted.

Policy 3.2.5 The City shall investigate the need for a pedestrian linkage across the Santan Freeway at the existing Arrowhead Drive alignment within the Pecos Ranch community.

Policy 3.2.6 The City will encourage proposed retail centers to promote pedestrian oriented facilities and design.

Policy 3.2.7 Encourage bicycle lockers and other bicycle user facilities.

Transit

Objective 3.3
To provide realistic alternatives to reduce traffic congestion and air pollution in the Santan Freeway Corridor Study Area by promoting regional transit and utilizing existing transportation facilities as a foundation for development.

Policy 3.3.1 The City should seek to reduce local traffic congestion by promoting (local) transit alternatives along major arterials and at high intensity commercial nodes.

Policy 3.3.2 The City should develop the Bicycle Element and should address issues related to the linkage of private development with public transit and recreational facilities within the Chandler Municipal Planning Area.

Policy 3.3.3 The City should work with the Regional Public Transportation Authority to determine potential alignment alternatives and station locations for a fixed guideway transit system.

Policy 3.3.4 The City should study the development of a transit center located adjacent to the Santan Freeway Corridor and Union Pacific Railroad alignment.

Policy 3.3.5 The City will seek to reduce local traffic congestion by promoting alternative transit points along major arterials and at high intensity employment nodes.

Policy 3.3.6 The City should work with the Regional Public Transportation Authority to investigate expansion of the metropolitan transit system as ridership demand increases.

Policy 3.3.7 The City should work with the Regional Public Transportation Authority to secure TEA-21 Federal Funding for a light rail transit system.

Policy 3.3.8 The City should require all developers to assess the need for the incorporation of transit facilities into project design prior to approval for all properties adjacent to major arterials.

Policy 3.3.9 The City should designate a feasible location within the vicinity of Arizona Avenue and the Santan Freeway interchange for a park-and-ride lot.

Policy 3.3.10 Developers shall dedicate the necessary right-of-way for bus pullouts, as per the City's Transportation Plan.

3.4 Transportation and Circulation Plan

Functional Roadway Classification System

The land uses proposed for the Study Area indicate the need for a well-developed roadway network that will adequately service residential- and employment-related commuter traffic. Roadways within the Study Area are defined using the Functional Roadway Classification System. The City of Chandler currently employs this system to classify its roadway network in order to apply a standardized method for design and construction. The functional Roadway Classification System is utilized to assesses distinguishing features such as capacity/volume, continuity, access control, and facility spacing. Table 3.1, *Study Area Roadway Characteristics*, provides an inventory of existing and projected roadway conditions within the Santan Freeway Corridor Study Area, and provides projected traffic volumes for arterial roadway segments north and south of the Santan Freeway. The following five roadway classification categories are found within the Santan Study Area:

- Principal Arterials/Freeways
- Major Arterials
- Minor Arterials
- Collector Streets
- Local Streets

The intent of the classification system is to identify and develop roadways that facilitate the efficient, safe, and continuous movement of traffic through the Santan Area and to reduce traffic volume on residential roadways.

Table 3.1
Study Area Roadway Characteristics

Roadway Segment	Roadway Classification	R.O.W. Width (ft.)	Current # of Lanes	Buildout # of Lanes	Interchange Roadway Volumes (Average Daily Traffic)	
					South of Interchange	*North of Interchange*
Price Rd.	Major Arterial		4	6	42,100	N/A
Dobson Rd.	Major Arterial	130′	4	6	35,300	35,300
Alma School Rd.	Major Arterial	130′	4/6	6	47,600	34,700
Arizona Ave.	Major Arterial	130′	6	6	44,000	38,300
McQueen Rd.	Major Arterial	130′	2/4	6	56,600	28,500
Cooper Rd.	Major Arterial	130′	2	4/6	52,300	34,100
Gilbert Rd.	Major Arterial	130′	2	6	54,700	30,200
Pecos Rd.	Major Arterial	130′	2/4	4-6	N/A	N/A
Germann Rd.	Major Arterial	130′	2/4	6	N/A	N/A
Arrowhead Dr.	Collector	N/A	N/A	N/A	N/A	N/A
Frye Rd	Collector	100′	2/4	N/A	N/A	N/A
Willis Rd.	Collector	110′	2	4-5	N/A	N/A
Ellis St.	Collector		2		N/A	N/A

Source: Maricopa Association of Governments, 1999.
City of Chandler, 1999.

Principal Arterials/Freeways

Principal arterials are designed to service a major portion of trips entering and leaving the urban area and are designed with traffic mobility and facilitation through the urban area as the highest priority. The principal arterials within the Santan Study Area include the Santan Freeway (AZ Loop 202) and Price Freeway (AZ Loop 101). Each of these facilities will be developed as six-lane freeways with access limited to arterial interchanges at one-mile intervals along the alignment.

Major Arterials

Major arterials are high volume, high speed roadways that carry a large volume of traffic. Along with freeways, major arterials should carry a larger proportion of trips entering and leaving the region, as well as the majority of through movements desiring to bypass portions of a region. Within the Santan Study Area, principal and major arterials will function to facilitate internal traffic movement from residential areas to business, activity centers and the Santan Freeway. Major arterials are generally aligned with the one-mile grid system.

Major Arterials typically utilize a right-of-way of 130 feet, flaring to approximately 150 feet at arterial-arterial intersections with dual left-turn lanes and single right-turn lanes.

The existing and proposed roadways designated for major arterial classification in the Santan Study Area include:

- Price Road
- Dobson Road
- Alma School Road
- Arizona Avenue
- McQueen Road
- Cooper Road
- Gilbert Road
- Pecos Road
- Germann Road

Minor Arterials

These roadways are similar to major arterials with respect to controlled access and travel speeds but generally support lower traffic volumes. Minor arterial roadways are intended to provide service trips of moderate length and a limited level of mobility in comparison with major and principal arterial roadways. Minor arterial roadways provide inter-community continuity, but should not penetrate identifiable neighborhoods. Minor arterials are generally aligned with the one-half mile grid system. While the city does have a Minor Arterial designation, there are no Minor Arterials in the Study Area.

Collector Streets

Collector streets act as intermediate roadways to facilitate traffic from neighborhoods or business centers onto the arterial roadway network. By penetrating neighborhood areas, collectors have the ability to distribute traffic without adversely affecting arterial circulation. As the Study Area develops, the collector street network will generally be established along the quarter mile-grid system. The City permits flexibility in the development of the collector street network for large developments where a mix of residential, employment and supportive services are part of a planned unit development project. The following roadway was identified as existing and proposed collector streets:

- Arrowhead Drive
- Frye Road
- Ellis Street
- Willis Road

The collector street system within the Santan Study Area is continually evolving as development occurs. New developments will be required to concentrate their access to large residential developments through the collector street network, thereby reducing impacts to arterial traffic movements.

Local Streets

The local street system in the Study Area consists of all residential, commercial, and industrial streets not included in the other functional classifications. The local street system provides direct access to adjacent land uses and linkage with arterial and collector roadways in the Study Area.

Roadway Design Guidelines

Roadway Design Guidelines for the Santan Study Area should comply with those standards specified by the Chandler Transportation Plan Element of the Chandler General Plan. Figures 3-1 and 3-2, *Arterial Street Cross Sections and Collector and Local Street Cross Sections*, illustrate typical cross sections from the City Transportation Plan for major arterial, minor arterial, major collector, minor collector, and local roadways.

While major and minor arterial alignments are expected to occur along the one- and one-half mile grid, the City should allow the collector and local street network within the Study Area to be defined by future development. Existing alignments will largely be preserved and proposed alignments should show continuity and connectivity with the existing system. Improvements to collector and local roadways will be the responsibility of the developer and must conform to the design guidelines established by the General Plan Transportation Element. Roadway improvements will be approved by the City by individual development and will consider projected traffic volumes, impact on existing and adjoining roadways, and efficiency of traffic movement.

Pedestrian, Bicycle, and Equestrian Facilities

Facilities for pedestrians and bicyclists in the Study Area are an important component of the Circulation framework. Advance planning for such facilities can contribute to a reduction in levels of vehicular traffic and increased safety for pedestrians, cyclists, and motorists. The Study Area's pedestrian circulation framework dictates the development of sidewalks and other pedestrian facilities within residential areas and along roadways of high traffic volume near activity centers, such as commercial areas, schools, and parks.

Bicycle circulation is an integral component in the development of the Study Area. By designing a continuous network of bicycle paths, lanes, and routes, the system will support the objectives outlined by the Land Use Plan and City Transportation Plan. Types of bicycle facilities to be utilized within the Study Area include:

Major Collector Street

Typical Cross Section
With Bike Lanes

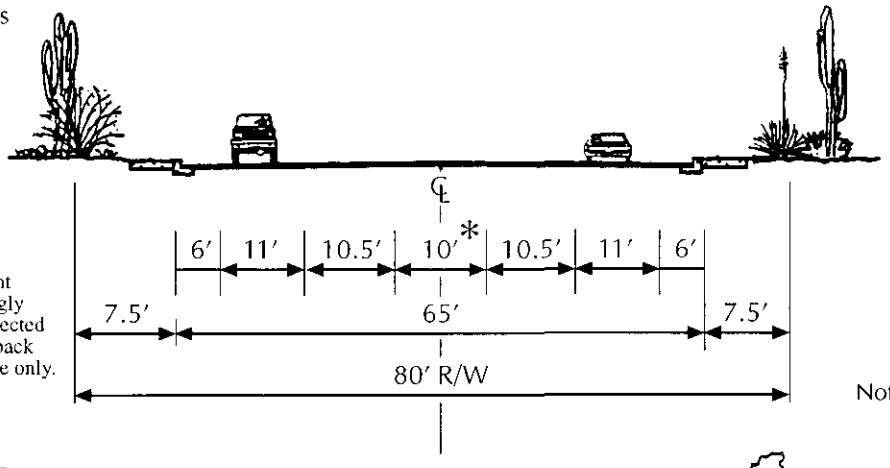

*Center turn lane may be eliminated and pavement width reduced accordingly when warranted by projected traffic and shall be 55' back of curb with bicycle lane only.

Not to scale

Minor Collector Street

Typical Cross Section
With Bike Lanes

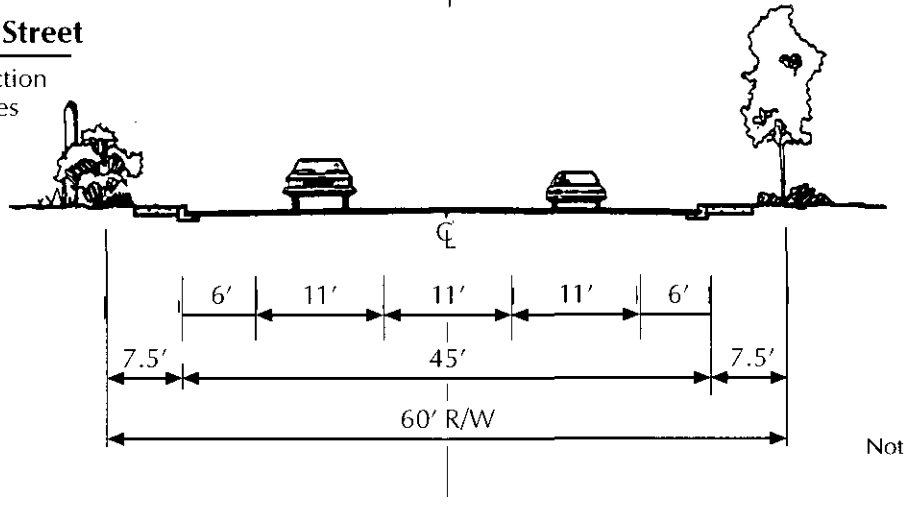

Not to scale

Local Street

Typical Cross Section

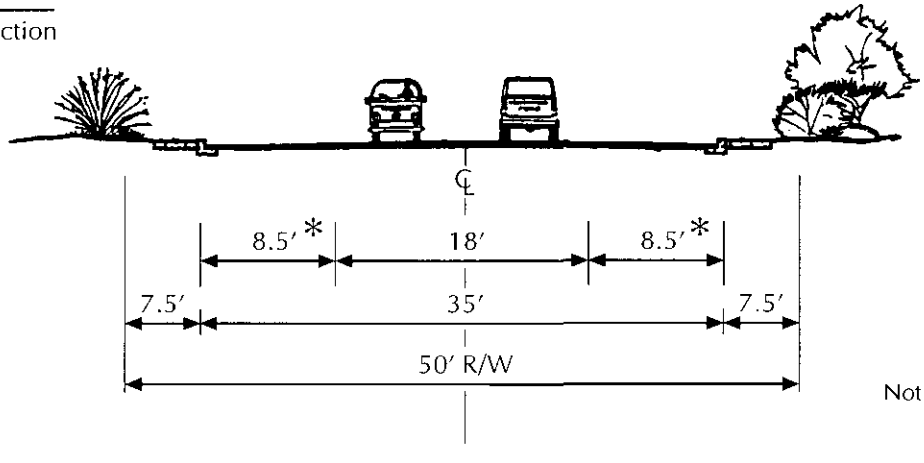

*Parking lane not marked by striping.

Not to scale

Santan Freeway Corridor Area Plan
City of Chandler

Figure 3-1
Collector Street Cross Sections

DCM GROUP BRW A DAMES & MOORE GROUP COMPANY

Major Arterial Street

Typical Cross Section
With Bike Lanes

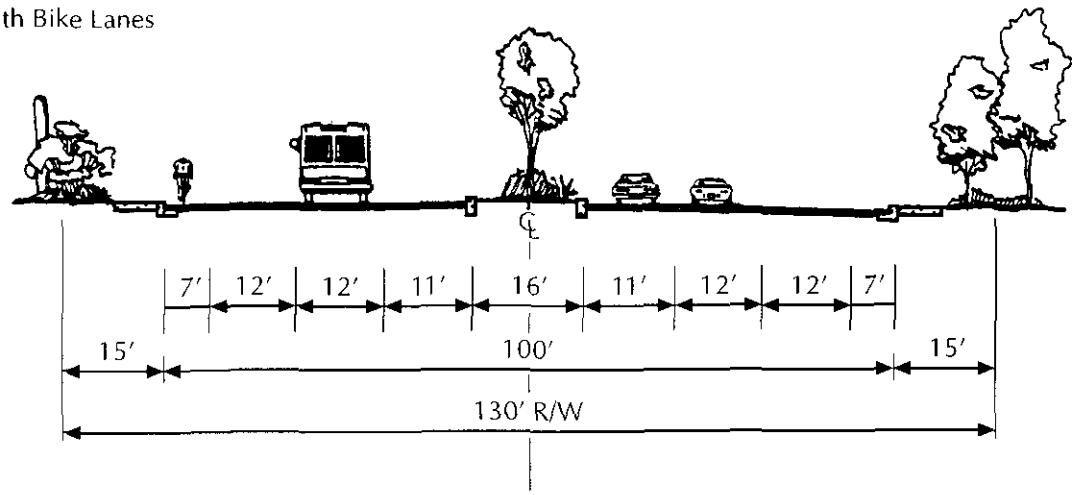

Not to scale

Minor Arterial Street

Typical Cross Section
With Bike Lanes

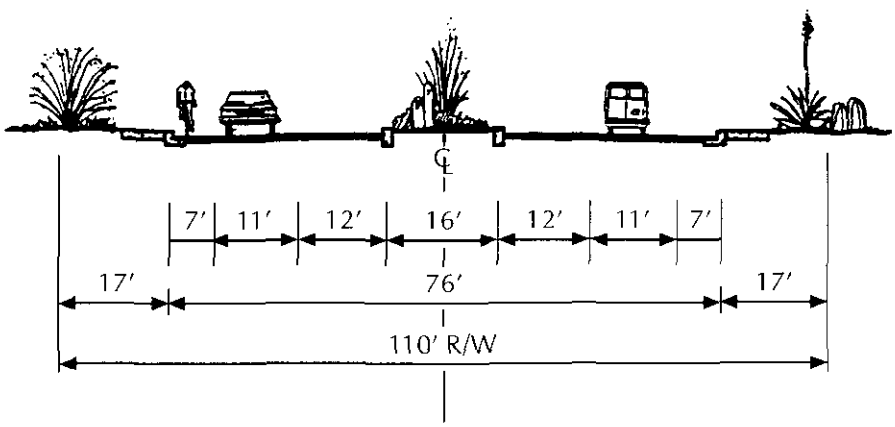

Not to scale

Santan Freeway Corridor Area Plan
City of Chandler

Figure 3-2
Arterial Street Cross Sections

DCM GROUP BRW A DAMES & MOORE GROUP COMPANY

Bike Path

An exclusive bike path is a separated right-of-way designated for the exclusive use of bicycles. Cross-flows by pedestrians and motorists are minimized. A paved pathway is provided accompanied by signage designating the location of the bike path. Bike paths are specifically located to establish links between major destination points, such as parks and schools. Bike paths shall be adequately buffered from roadways by the use of a landscaping strip or other barrier to avoid conflicts.

Bike Lane

A delineated bike lane is a shared, designated by signs and pavement for the semi-exclusive use of bicycles. Through-travel by motor vehicles or pedestrians is not allowed. Vehicle parking within designated bike lanes may be allowed where warranted.

Bike Route

A bike route is a shared right-of-way (roadway) designated by posted signs. This class of facility is the least expensive to develop and maintain and appropriate signage should be posted as development occurs.

The City is actively assessing the status of continuous pedestrian- and bicycle-oriented facilities within the Study Area, particularly land use adjacent to the Consolidated Canal for the proposed Paseo System. This Element would define a continuous pedestrian/ bicycle/equestrian corridor, linking portions of south Chandler to the Downtown and adjacent commercial, residential, and open space areas. City design guidelines for future arterial roadways incorporate the inclusion of bike lanes and sidewalks, providing users with an adequate separation from vehicular traffic.

Public Transit

As densities increase and regional activity centers are established, public transit facilities will become an important component of the Transportation and Circulation Element. The Santan Freeway will facilitate employment growth in the area, thus defining initial transit needs and the pace at which services develop. Additional increases in employment and housing densities within the Study Area will establish the demand for transit services, particularly in response to a potential multi-modal transit center located at the intersection of Germann Road and the Union Pacific Railroad corridor. The need for this center is strictly predicated by employment-based development densities and the development of a regional light rail transit service that would utilize the existing railroad right-of-way.

Necessary components of a public transit system should adhere to the principles of affordability and convenience for system users within the Study Area. A study of public transit in the Santan Study Area should address these issues prior to implementation of future City Transit Plan Updates. The Transit Plan should adhere to the Land Use and Transportation and Circulation Elements of the Santan Area Plan, prior to its adoption. This will ensure that a public transit system evolves in accordance with development and activity centers and will require City staff to work closely with developers. This type of cooperative effort will ensure that the proper and adequate transit facilities are provided for future residents and employees.

Santan Freeway Corridor

The Santan Freeway, when completed, will act as a catalyst to enhance regional commercial and industrial access to the Study Area. Preliminary design plans for the freeway have identified the inclusion of six traffic lanes, with portions of the alignment above and below grade with interchanges at Dobson Road, Alma School Road, Arizona Avenue, McQueen Road, Cooper Road and Gilbert Road. Table 3.2, *Average Daily Traffic Volumes 2020: Santan Freeway Segments*, identifies freeway segments within the Study Area and the predicted volumes for those segments in 2020. The westernmost segments will facilitate the largest volumes of traffic, with volumes decreasing significantly towards the east.

Table 3.2
Average Daily Traffic (ADT) Volumes 2020:
Santan Freeway Segments

Freeway Segment	2020 Roadway Volume
Price Rd - Dobson Rd	121,000
Dobson Rd - Alma School Rd	123,700
Alma School Road - Arizona Ave	106,237
Arizona Ave – McQueen Rd	87,400
McQueen Rd – Cooper Rd	84,293
Cooper Rd – Gilbert Rd	77,980

Source: Maricopa Association of Governments, 1999.

The freeway corridor should utilize noise attenuation measures when possible and apply landscaping design standards to promote a positive visual environment while reducing negative urban impacts. Disruption of normal traffic patterns should be kept to a minimum during freeway construction with adequate detours and traffic management practices provided. Development within the Study Area may dictate the need to mitigate disruption to affected businesses and residents during the freeway construction phase.

Traffic Impacts

The Santan Area Plan has recommended a residential development intensity level that will equate to approximately 32,932 persons at built-out. The projected resident population, compounded by area employment (approximately 45,859 jobs, will significantly impact circulation patterns.

Traffic projections within the Santan Study Area were extracted from the Maricopa Association of Government's modeling database. The model is consistent with the City Transportation Plan through the Year 2020 and assumes ultimate buildout conditions for all Study Area Arterial Roadways.

3.5 Transportation and Circulation Implementation Program

Table 3.4, *Transportation and Circulation Implementation Program,* identifies the transportation implementation measures that the City should take to implement the goals and objectives of the Santan Freeway Corridor Area Plan.

The implementation program lists a specific implementation measure, timeframe, key participants, project location and the resources necessary to accomplish each implementation measure.

Definitions:

Implementation Measure - Lists the action necessary to carry out the Transportation and Circulation Plan Element of the Santan Area Plan.

Purpose - Identifies the intent of accomplishing that particular action.

Timeframe - Establishes the target 5-year priority within the 20-year planning horizon for implementation of the action.

Key Participants - Assigns the elected or appointed public body, agency, group, individuals or volunteers principally responsible to initiate the implementation action.

Resources - Lists the potential funding, City staff, volunteer or other community resources necessary to carry out the implementation action.

Table 3.4
Transportation and Circulation Implementation Program

Implementation Measure	Timeframe (Years)				Key Participants	Resources
	1-2	3-5	5-10	10-20		
Develop strategies to enhance/encourage development of pedestrian/ bicycle linkages throughout the planning area	*				City Planning Staff, Public Works, Parks and Recreation Staff	Staff Resources
Establish access control criteria for development in proximity to freeway interchanges	*				City Planning Staff and Public Works	Staff Resources
Upgrade traffic control systems along existing arterial roadways with volumes exceeding 15,000 per day	*	*	*	*	Public Works	TEA – 21, LTAF,HURF
Expand transit network within the Study Area as demand densities warrant services		*	*	*	Public Works, Regional Public Transportation Authority	Staff Resources
Integrate transit facilities with development and promote the development of a regional transportation system	*	*	*	*	Public Works, Regional Public Transportation Authority	LTAF
Realign Pecos Road		*			Public Works	Developer Contributions
Realign Willis Road		*			ADOT	ADOT
Realign Germann Road			*		City Planning Staff, Public Works	Developer Contributions
Establish a coordination dialogue with ADOT through the freeway development process	*				City Planning Staff, Public Works and ADOT	Staff Resources
Promote establishment of pedestrian/bicycle easements adjacent to the freeway corridor	*				City Planning Staff, Public Works and Parks and Recreation Department	TEA – 21, Developer Contributions
Coordinate the establishment and preservation of a dedicated right-of-way to accommodate a future fixed guide-way transit system	*	*	*	*	Regional Public Transportation Authority	Staff Resources

Source: BRW, Inc., 1999.