C.

FEB 18 2015

Chandler
All-America City
2010

Chandler • Arizona
Where Values Make The Difference

MEMORANDUM **Planning Division – PZ Memo No. 15-017**

DATE: FEBRUARY 18, 2015

TO: PLANNING AND ZONING COMMISSION

THRU: JEFF KURTZ, PLANNING ADMINISTRATOR
KEVIN MAYO, PLANNING MANAGER KM

FROM: SUSAN FIALA, CITY PLANNER SAF

SUBJECT: ZUP14-0028 SPRINT AT ALMA SCHOOL AND ELLIOT

Request: Use Permit approval to replace an existing wireless communication facility with a monopalm

Location: 3150 North Alma School Road, northwest corner of Alma School and Elliot roads

Applicant: Jeffrey Quinn, Crown Castle for Sprint

Zoning: Planned Area Development (PAD)

RECOMMENDATION

Planning Staff, upon finding the Use Permit request to be consistent with the General Plan, recommends approval subject to conditions.

BACKGROUND

The request is for Use Permit approval to replace an existing wireless communication facility with a monopalm. The site is located at 3150 North Alma School Road within the Paseo del Oro center. Elliot Place condominiums is the nearest residential development, located approximately 52 feet (ft.) to the west. Commercial, office, retail, and a preschool are surrounding land uses.

The proposed monopalm is 42 ft. tall, measured to the top of antennas, and replaces a 55 ft. tall 'slim line' monopole in the same location. Existing antennas are concealed within a stealth canister and cannot accommodate the required antenna upgrade from 3G to 4G technology. Reduced height is to create a more natural palm tree to fit in with the surroundings.

The Zoning Code requires a Use Permit for wireless communication facilities in non-industrial zoning districts that do not utilize existing poles or towers.

A monopalm is a cell tower disguised as a palm tree. The monopalm would be a Date Palm design, having a minimum of 65 fronds, and the antennas would be painted to match the fronds. No exterior changes to the existing equipment enclosure are proposed. Equipment inside the enclosure is upgraded.

Within the immediate area, there are no other suitable alternatives for co-location of the wireless communication facility on existing poles or towers. An inventory of existing facilities, vertical towers, and structures was prepared by the applicant to assess alternative locations. The applicant determined the current location is the most feasible to continue to serve the area and a replacement of the facility meets the frequency requirements and locational service needs. The inventory is attached.

Photographic simulations illustrating existing views and proposed views of the wireless communication facility were provided by the applicant. The simulations depict the equipment enclosure and monopalm as viewed from several locations. A pineapple is illustrated in the photo-simulations, however, the elevations do not. Planning Staff recommends adding the pineapple to the monopalm as a condition of approval.

DISCUSSION

Planning Staff finds the replacement of the monopole with a monopalm appropriate. The monopalm design is appropriate at this location given the presence of palms in the adjacent condominium development. The separation from the condominiums to the west is approximately 52 ft. The proposed monopalm is a replacement as well as a reduction of 13 ft. from the existing height. A new 55 ft. tall monopalm, within the same center, was approved on November 20, 2014 and located about 80 ft. to the southwest of the subject monopalm.

Planning Staff is of the opinion that permitting the monopalm at this specific location is consistent with the review factors examined as part of the Use Permit process.

PUBLIC / NEIGHBORHOOD NOTIFICATION

- This request was noticed in accordance with the requirements of the Chandler Zoning Code.
- A neighborhood meeting was held on January 26, 2015. No one other than the applicant attended.
- As of the writing of this memo, Planning Staff is not aware of opposition to this request.

RECOMMENDED ACTION

Planning Staff, upon finding consistency with the General Plan, recommends approval of Use Permit, ZUP14-0028 SPRINT AT ALMA SCHOOL AND ELLIOT, subject to the following conditions:

1. Development shall be in substantial conformance with approved exhibits. Expansion or modification of the use beyond approved exhibits shall void the Use Permit and require new Use Permit application and approval.
2. A pineapple shall be added to the monopalm.

PROPOSED MOTION

Motion to recommend approval of Use Permit, ZUP14-0028 SPRINT AT ALMA SCHOOL AND ELLIOT, subject to the conditions as recommended by Planning Staff.

Attachments

1. Vicinity Maps
2. Site Plan and Elevations
3. Narrative and Inventory
4. Photographic simulations

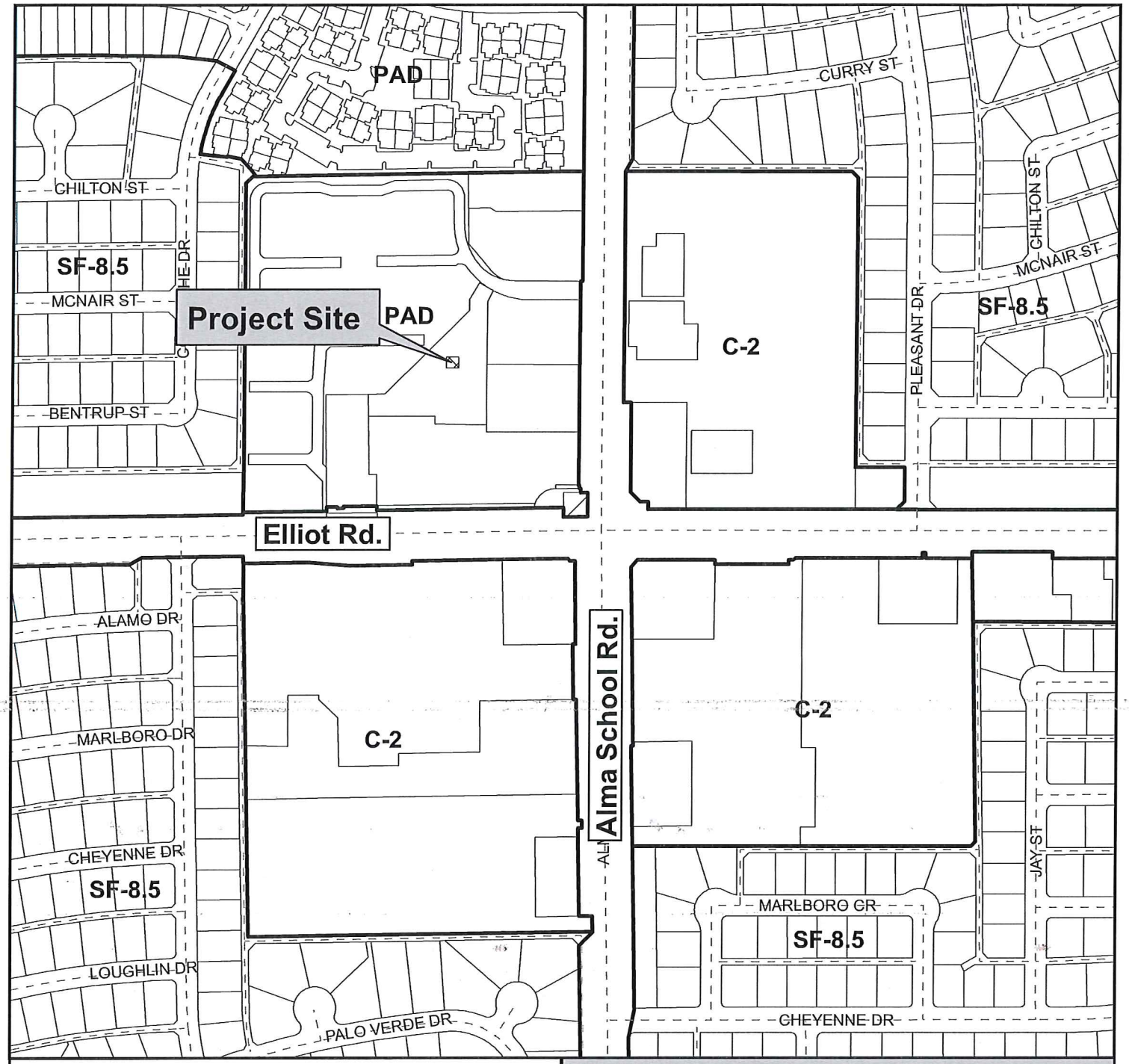

Vicinity Map

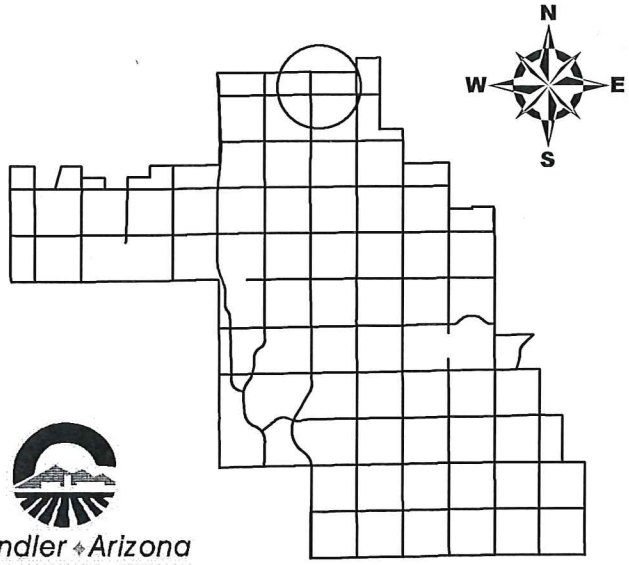

ZUP14-0028

Sprint at Alma School and Elliot

Chandler Arizona
Where Values Make The Difference

CITY OF CHANDLER 1/15/2015

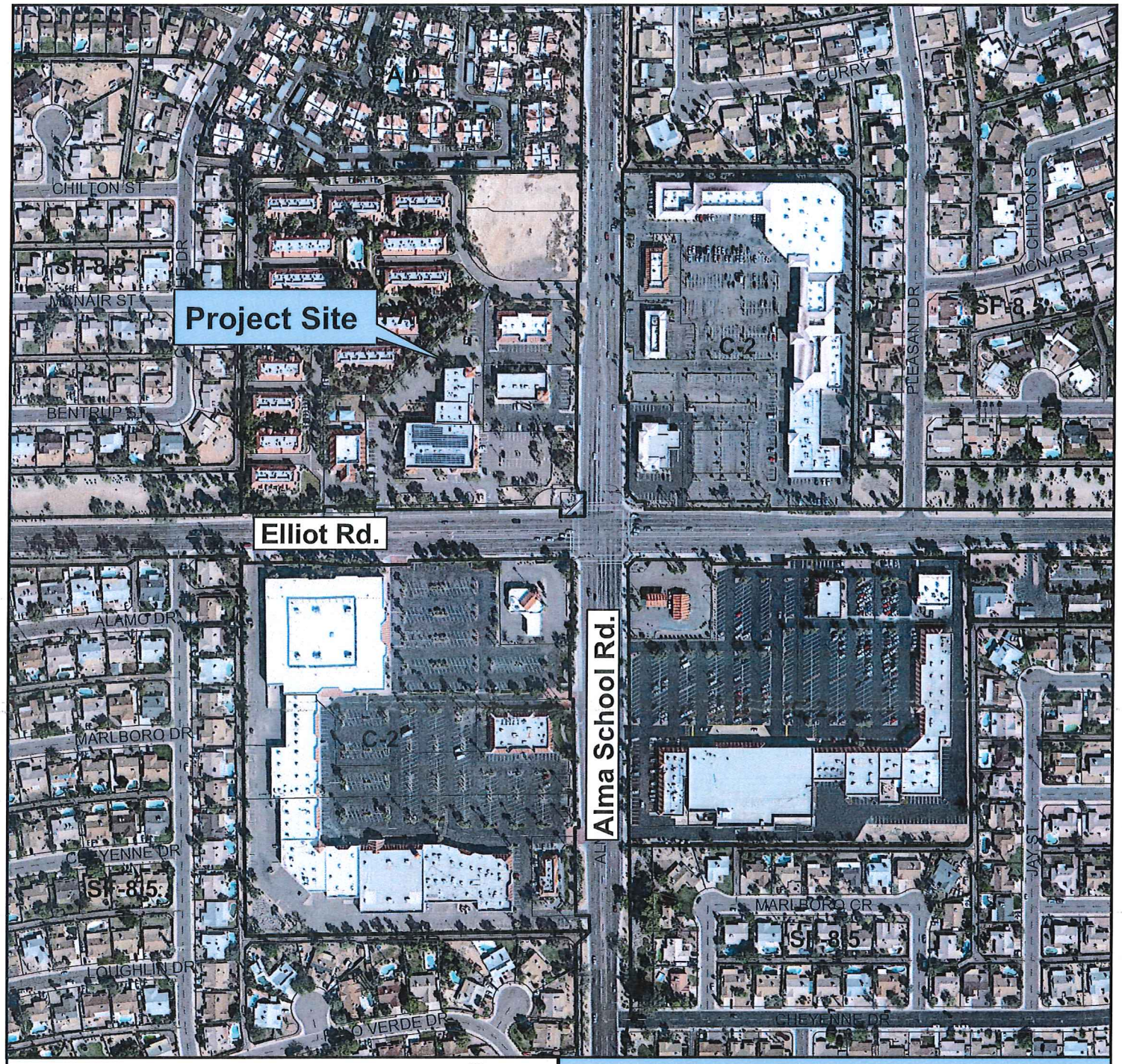

Vicinity Map

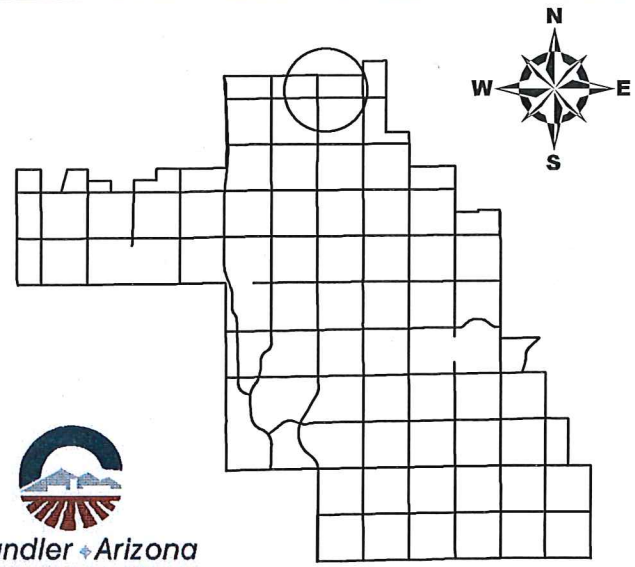

ZUP14-0028

Sprint at Alma School and Elliot

Chandler Arizona
Where Values Make The Difference

CITY OF CHANDLER 1/15/2015

Sprint®
NETWORK VISION PROJECT

SPRINT AT ALMA SCHOOL AND ELLIOT

SITE NAME: KEEBLER-PHX198

SITE NUMBER: PH80XC118-A

CROWN SITE NUMBER: 879365

STRUCTURE TYPE: MONOPALM

PROJECT TYPE: POLE AND ANTENNA REPLACEMENT WITH NEW MONO-PALM STEALTH TOWER

REV	DATE	DESCRIPTION
A	06/20/14	ISSUED FOR PERMIT
B	06/25/14	MONOPINE REDESIGN
C	07/29/14	MONOPALM REDESIGN
D	08/25/14	CLIENT COMMENTS
E	09/09/14	ISSUED FOR PERMIT
F	09/26/14	ISSUED FOR PERMIT
G	10/14/14	ISSUED FOR PERMIT
H	12/30/14	ISSUED FOR PERMIT

PROJECT NO.: 120-576.00

DRAWN BY:	CHECKED BY:
SDN	SA

THIS DRAWING IS COPYRIGHTED AND IS THE SOLE PROPERTY OF THE OWNER. IT IS PRODUCED SOLELY FOR USE BY THE OWNER AND ITS AFFILIATES. REPRODUCTION OR USE OF THIS DRAWING AND/OR THE INFORMATION CONTAINED IN IT IS FORBIDDEN WITHOUT THE WRITTEN PERMISSION OF THE OWNER.

SCOPE OF WORK

1. THE WIRELESS COMMUNICATIONS FACILITY IS NOT INTENDED FOR HUMAN OCCUPANCY.
2. THIS FACILITY DOES NOT REQUIRE POTABLE WATER AND WILL NOT PRODUCE ANY SEWAGE.
3. CONTRACTOR SHALL VERIFY ALL PLANS AND EXISTING DIMENSIONS AND CONDITIONS ON THE JOB SITE AND SHALL IMMEDIATELY NOTIFY THE ENGINEER IN WRITING OF ANY DISCREPANCIES BEFORE PROCEEDING WITH THE WORK OR BE RESPONSIBLE FOR SAME.
4. THE SCOPE OF WORK CONSISTS OF MODIFYING THE EXISTING WIRELESS INSTALLATION:
   - INSTALLATION OF (1) NEW 42'-0" HIGH MONO-PALM STEALTH WITH A QUANTITY OF 65 FRONDS NOT TO EXCEED 47'
   - INSTALLATION OF (3) NEW PANEL ANTENNAS (APXVTM14-C-120)
   - INSTALLATION OF (3) NEW PANEL ANTENNAS (APXVSPP18-C-A20)
   - INSTALLATION OF (3) NEW RRH (PCS 1900MHz 4x45W-65MHz)
   - INSTALLATION OF (3) NEW RRH (TD-RRH8x20-25)
   - INSTALLATION OF (4) NEW EQUIPMENT CABINETS
   - INSTALLATION OF (1) NEW PPC CABINET
   - INSTALLATION OF (1) NEW HOFFMAN BOX
   - REMOVING EXISTING 55' STEALTH TOWER TO BE REPLACED

PROPERTY SUMMARY

APN: 302-07-961

LATITUDE: 33.350822
LONGITUDE: -111.860311

ZONING JURISDICTION: CITY OF CHANDLER

ZONING CLASSIFICATION: PAD

LESSOR:

CROWN ATLANTIC CO. LLC
5350 N. 48th STREET
SUITE 305
CHANDLER, AZ 85226
CONTACT: CONNIE WALTERS
PH: (480) 735-6921

APPLICABLE CODES & STANDARDS

- 2012 INTERNATIONAL BUILDING CODE.
- 2012 INTERNATIONAL MECHANICAL CODE.
- 2012 INTERNATIONAL PLUMBING CODE.
- 2011 NATIONAL ELECTRICAL CODE.

SITE SUMMARY TABLE

ZONING DISTRICT: PLANNED AREA DEVELOPMENT

SPECIAL USE PERMIT: 0.057392 ACRES ≈ 2500. SQ. FT.

PARENT PARCEL 39,032 SQ. FT. (0.90 ACRES)

UTILITY TABLE

WATER:	N/A
SEWER	N/A
ELECTRIC:	APS
POLICE:	CHANDLER POLICE DEPARTMENT
FIRE:	CHANDLER FIRE DEPARTMENT
TELEPHONE:	TBD
REFUSE:	(TECH TO CARRY OUT)
SCHOOL DIST:	CHANDLER UNIFIED SCHOOL DISTRICT

INDEX OF DRAWINGS

SHT. NO.	DESCRIPTION	REV. NO.
T1	TITLE SHEET	H
C1	OVERALL SITE PLAN	H
C2	EXISTING & NEW SITE PLANS	H
C3	EXISTING ANTENNA PLAN & EQUIPMENT ELEVATION	H
C4	EXISTING & NEW SOUTH ELEVATIONS	H
C5	EXISTING & NEW WEST ELEVATIONS	H
C6	EXISTING & NEW NORTH ELEVATIONS	H
C7	EXISTING & NEW EAST ELEVATIONS	H
C8	EQUIPMENT DETAILS	H

VICINITY MAP

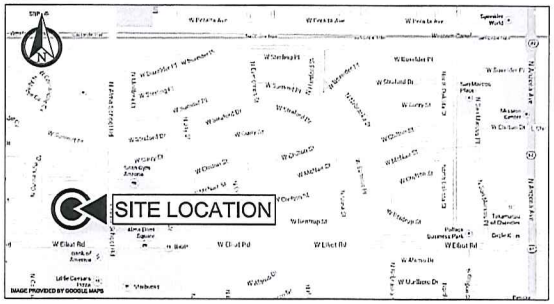

DRIVING DIRECTIONS

FROM PHOENIX, AZ ALU OFFICE:

HEAD WEST ON W UTOPIA RD, TURN LEFT ONTO N BLACK CANYON HWY (SIGNS FOR I-17 S/PHOENIX), TAKE THE RAMP ON THE LEFT ONTO I-17 S, MERGE ONTO I-10 E, SLIGHT RIGHT ONTO US-60 E (SIGNS FOR MESA - GLOBE), TAKE EXIT 178 FOR ALMA SCHOOL RD, TURN RIGHT ONTO S ALMA SCHOOL RD AND THE DESTINATION WILL BE ON THE RIGHT.

CONTACTS

APPLICANT:

SPRINT SPECTRUM L.P.
5710 W CHANDLER BLVD., SUITE 190,
CHANDLER, AZ 85225
CONTACT: LANCE STREET
PHONE: 623-806-8632

A&E:

CALTROP CORPORATION
2125 E. KATELLA AVENUE
SUITE 225
ANAHEIM, CA 92806
CONTACT: JOHN RODRIGUEZ
PHONE: 714-464-1659

PROJECT MANAGER:

CROWN CASTLE
6909 W. RAY ROAD, STE. 21,
CHANDLER, AZ 85226
CONTACT: DARRICK MANEZES
PHONE: 480-273-5337

CONSTRUCTION MANAGER:

CROWN CASTLE
6909 W. RAY ROAD, STE. 21,
CHANDLER, AZ 85226
CONTACT: RICHARD WALKER
PHONE: 909-618-3463

SPRINT SPECTRUM L.P.
5710 W CHANDLER BLVD., SUITE 190,
CHANDLER, AZ 85225
CONTACT: GORDON TIBBETTS
PHONE: 480-747-5189
EMAIL: gordon.tibbetts@sprint.com

APPROVAL

SITE ACQUISITION MANAGER DATE

CONSTRUCTION MANAGER DATE

A&E MANAGER DATE

PLANNING CONSULTANT DATE

RF MANAGER DATE

PROPERTY OWNER DATE

SPRINT REPRESENTATIVE DATE

THE ABOVE PARTIES HEREBY APPROVE AND ACCEPT THESE DOCUMENTS AND AUTHORIZE CONTRACTOR TO PROCEED WITH THE CONSTRUCTION DESCRIBED HEREIN. ALL DOCUMENTS ARE SUBJECT TO REVIEW BY THE LOCAL BUILDING DEPARTMENT AND MAY IMPOSE CHANGES OR MODIFICATIONS.

Call at least two full working days before you begin excavation.
ARIZONA 811
Arizona Blue Stake, Inc.
Dial 8-1-1 or 1-800-STAKE-IT (782-5348)
In Maricopa County: (602) 263-1100

CALTROP Telecom
960 WEST ELLIOT ROAD,
SUITE 116
TEMPE, AZ 85284

Sprint NETWORK VISION PROJECT
5710 W. CHANDLER BLVD.,
SUITE 190,
CHANDLER, AZ 85226

CROWN CASTLE
6909 W. RAY ROAD, STE. 21,
CHANDLER, AZ 85226
www.crowncastle.com

KEEBLER-PHX198

PH80XC118-A

3150 N. ALMA SCHOOL ROAD
CHANDLER, AZ 85224

SHEET NAME
TITLE SHEET

SHEET NUMBER
T1

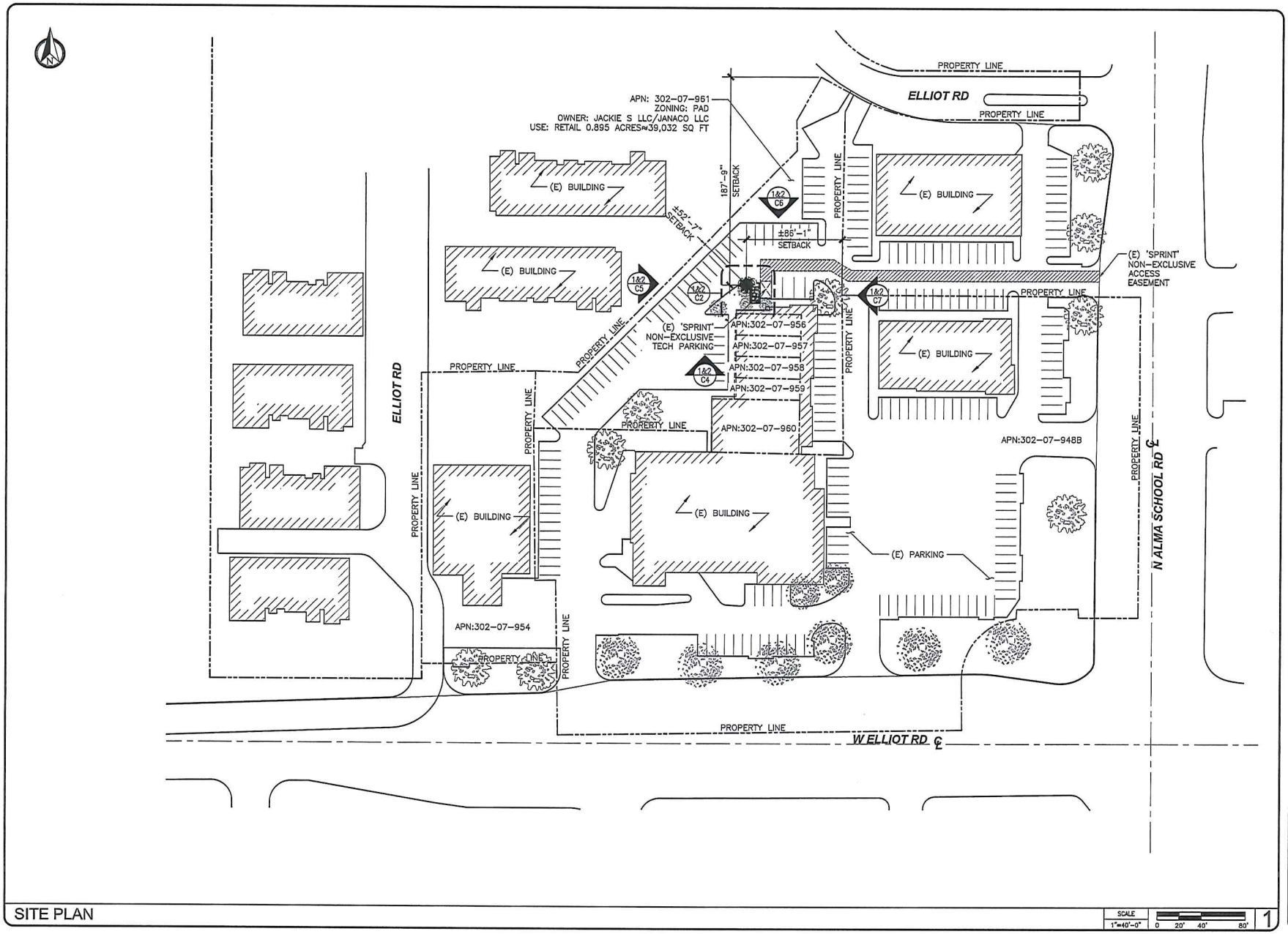

SITE PLAN

SCALE 1"=40'-0" 0 20' 40' 80'

1

REV	DATE	DESCRIPTION
A	06/20/14	ISSUED FOR PERMIT
B	06/25/14	MONOPINE REDESIGN
C	07/29/14	MONOPALM REDESIGN
D	08/25/14	CLIENT COMMENTS
E	09/09/14	ISSUED FOR PERMIT
F	09/26/14	ISSUED FOR PERMIT
G	10/14/14	ISSUED FOR PERMIT
H	12/30/14	ISSUED FOR PERMIT

PROJECT NO.:	120-576.00
DRAWN BY:	CHECKED BY:
SDN	SA

THIS DRAWING IS COPYRIGHTED AND IS THE SOLE PROPERTY OF THE OWNER. IT IS PRODUCED SOLELY FOR USE BY THE OWNER AND ITS AFFILIATES. REPRODUCTION OR USE OF THIS DRAWING AND/OR THE INFORMATION CONTAINED IN IT IS FORBIDDEN WITHOUT THE WRITTEN PERMISSION OF THE OWNER.

CALTROP Telecom
960 WEST ELLIOT ROAD,
SUITE 116
TEMPE, AZ 85284

Sprint NETWORK VISION PROJECT
5710 W. CHANDLER BLVD.,
SUITE 190,
CHANDLER, AZ 85226

CROWN CASTLE
6909 W. RAY ROAD, STE. 21,
CHANDLER, AZ 85226
www.crowncastle.com

KEEBLER-PHX198

PH80XC118-A

3150 N. ALMA SCHOOL ROAD
CHANDLER, AZ 85224

SHEET NAME

OVERALL SITE PLAN

SHEET NUMBER

C1

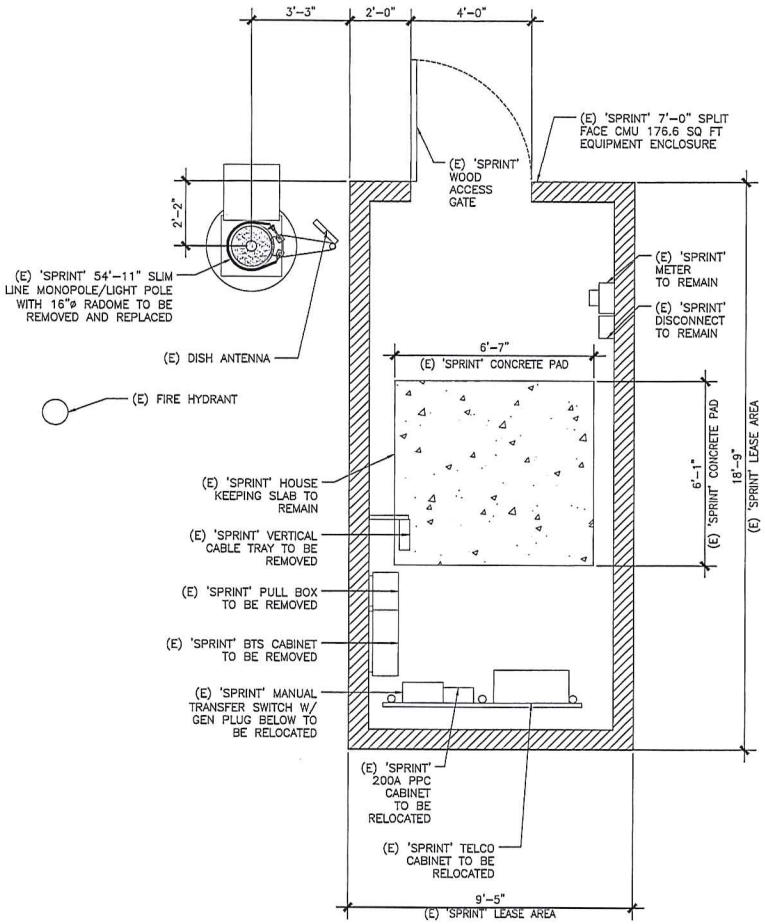

EXISTING SITE PLAN

SCALE 1/2"=1'-0" 0 1' 2' 4'

1

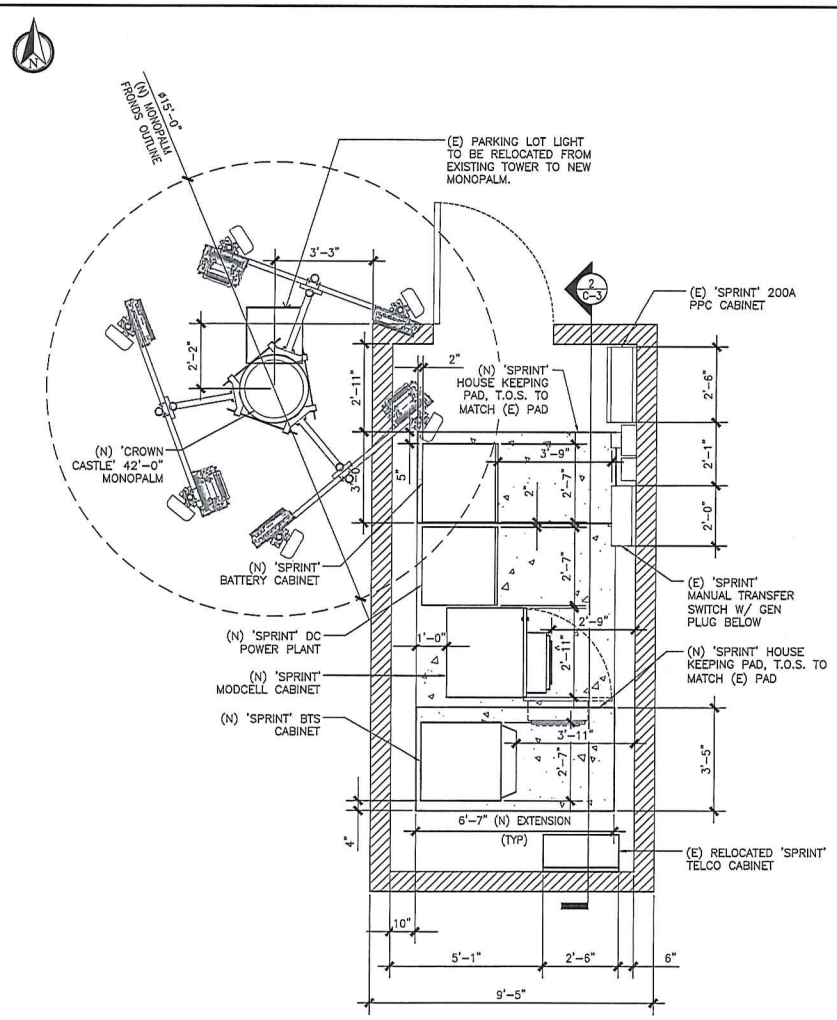

NEW SITE PLAN

SCALE 1/2"=1'-0" 0 1' 2' 4'

2

REV	DATE	DESCRIPTION
A	06/20/14	ISSUED FOR PERMIT
B	06/25/14	MONOPINE REDESIGN
C	07/29/14	MONOPALM REDESIGN
D	08/25/14	CLIENT COMMENTS
E	09/09/14	ISSUED FOR PERMIT
F	09/26/14	ISSUED FOR PERMIT
G	10/14/14	ISSUED FOR PERMIT
H	12/30/14	ISSUED FOR PERMIT

PROJECT NO.:	120-576.00
DRAWN BY:	CHECKED BY:
SDN	SA

THIS DRAWING IS COPYRIGHTED AND IS THE SOLE PROPERTY OF THE OWNER. IT IS PRODUCED SOLELY FOR USE BY THE OWNER AND ITS AFFILIATES. REPRODUCTION OR USE OF THIS DRAWING AND/OR THE INFORMATION CONTAINED IN IT IS FORBIDDEN WITHOUT THE WRITTEN PERMISSION OF THE OWNER.

CALTROP Telecom
960 WEST ELLIOT ROAD, SUITE 116
TEMPE, AZ 85284

Sprint NETWORK VISION PROJECT
5710 W. CHANDLER BLVD., SUITE 190,
CHANDLER, AZ 85226

CROWN CASTLE
6909 W. RAY ROAD, STE. 21,
CHANDLER, AZ 85226
www.crowncastle.com

KEEBLER-PHX198

PH80XC118-A

3150 N. ALMA SCHOOL ROAD
CHANDLER, AZ 85224

SHEET NAME

EXISTING & NEW SITE PLAN

SHEET NUMBER

C2

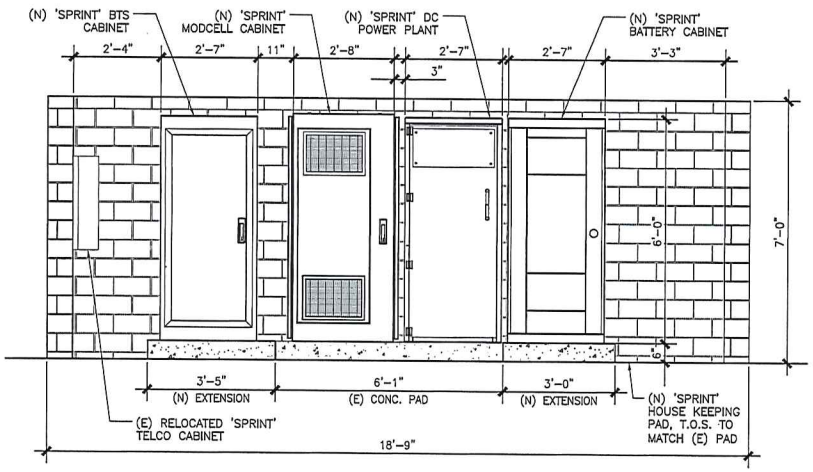

EQUIPMENT ELEVATION

SCALE N.T.S. | 2

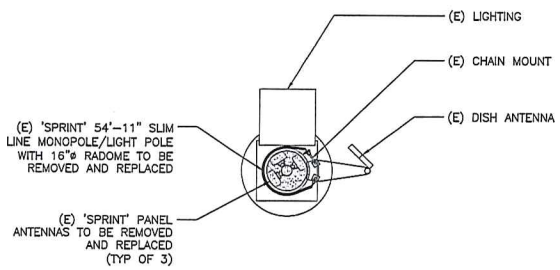

EXISTING ANTENNA PLAN

SCALE 1/2"=1'-0" 0 1' 2' 4' | 1

NOT USED | 3

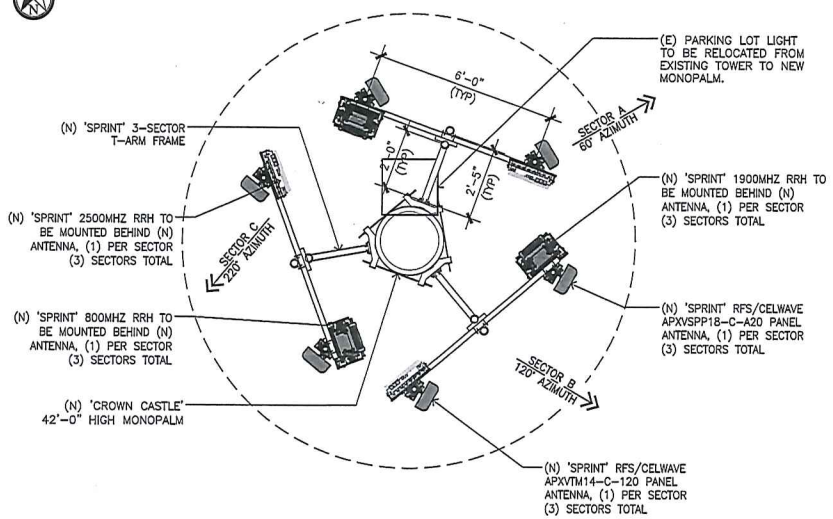

NEW ANTENNA PLAN

SCALE 1/2"=1'-0" 0 1' 2' 4' | 2

REV	DATE	DESCRIPTION
A	06/20/14	ISSUED FOR PERMIT
B	06/25/14	MONOPINE REDESIGN
C	07/29/14	MONOPALM REDESIGN
D	08/25/14	CLIENT COMMENTS
E	09/09/14	ISSUED FOR PERMIT
F	09/26/14	ISSUED FOR PERMIT
G	10/14/14	ISSUED FOR PERMIT
H	12/30/14	ISSUED FOR PERMIT

PROJECT NO.: 120-576.00

DRAWN BY:	CHECKED BY:
SDN	SA

THIS DRAWING IS COPYRIGHTED AND IS THE SOLE PROPERTY OF THE OWNER. IT IS PRODUCED SOLELY FOR USE BY THE OWNER AND ITS AFFILIATES. REPRODUCTION OR USE OF THIS DRAWING AND/OR THE INFORMATION CONTAINED IN IT IS FORBIDDEN WITHOUT THE WRITTEN PERMISSION OF THE OWNER.

CALTROP Telecom
960 WEST ELLIOT ROAD, SUITE 116
TEMPE, AZ 85284

Sprint NETWORK VISION PROJECT
5710 W. CHANDLER BLVD., SUITE 190,
CHANDLER, AZ 85226

CROWN CASTLE
6909 W. RAY ROAD, STE. 21,
CHANDLER, AZ 85226
www.crowncastle.com

KEEBLER-PHX198

PH80XC118-A

3150 N. ALMA SCHOOL ROAD
CHANDLER, AZ 85224

SHEET NAME

EXISTING ANTENNA PLAN & EQUIPMENT ELEVATION

SHEET NUMBER

C3

NOTES:

1. THIS DRAWING IS INTENDED TO DEPICT THE GENERAL LOCATION AND HEIGHT OF THE PROPOSED ANTENNAS ON THE PROPOSED TOWER. A STRUCTURAL DESIGN SHALL BE COMPLETED BY A PROFESSIONAL ENGINEER REGISTERED IN THIS STATE, CONCLUDING THAT THE PROPOSED TOWER IS STRUCTURALLY ADEQUATE TO RESIST THE PROPOSED LOADS.

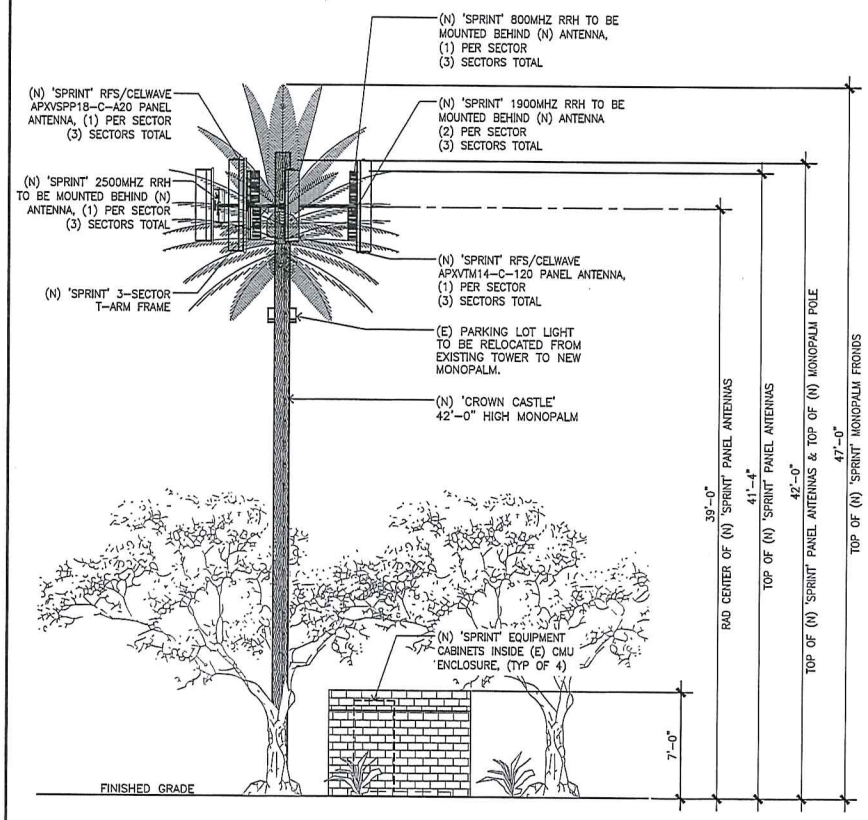

NEW SOUTH ELEVATION

SCALE 1/4"=1'-0" 0 2' 4' 8'

2

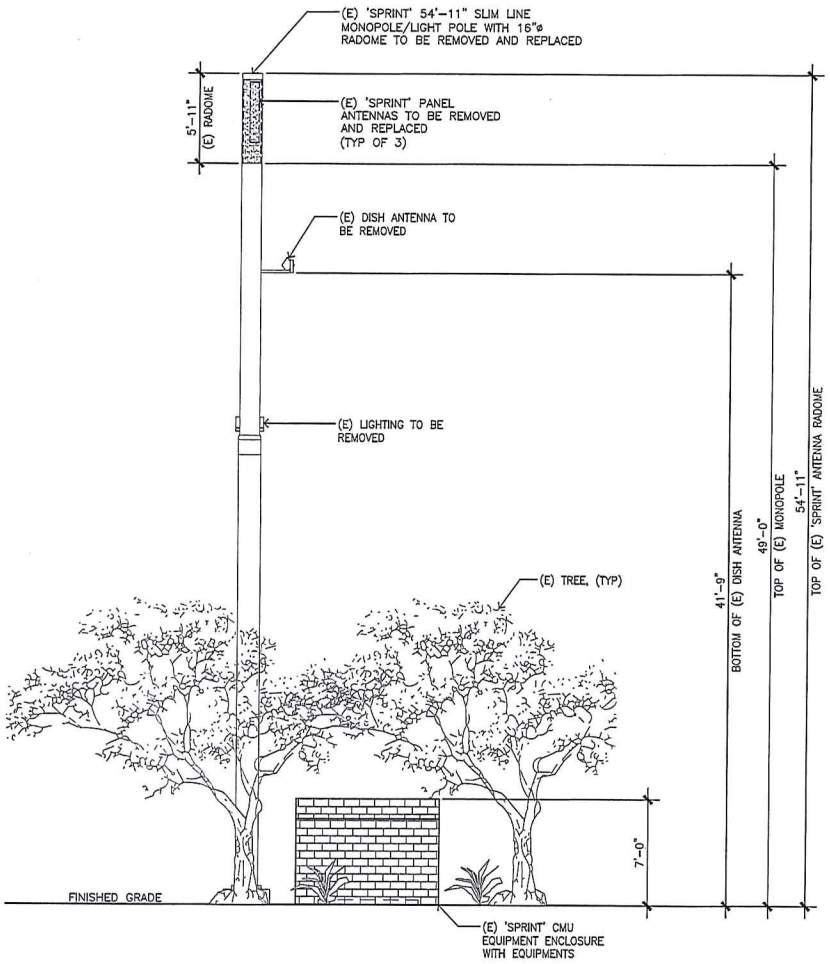

EXISTING SOUTH ELEVATION

SCALE 1/4"=1'-0" 0 2' 4' 8'

1

REV	DATE	DESCRIPTION
A	06/20/14	ISSUED FOR PERMIT
B	06/25/14	MONOPINE REDESIGN
C	07/29/14	MONOPALM REDESIGN
D	08/25/14	CLIENT COMMENTS
E	09/09/14	ISSUED FOR PERMIT
F	09/26/14	ISSUED FOR PERMIT
G	10/14/14	ISSUED FOR PERMIT
H	12/30/14	ISSUED FOR PERMIT

PROJECT NO.:	120-576.00
DRAWN BY:	CHECKED BY:
SDN	SA

THIS DRAWING IS COPYRIGHTED AND IS THE SOLE PROPERTY OF THE OWNER. IT IS PRODUCED SOLELY FOR USE BY THE OWNER AND ITS AFFILIATES. REPRODUCTION OR USE OF THIS DRAWING AND/OR THE INFORMATION CONTAINED IN IT IS FORBIDDEN WITHOUT THE WRITTEN PERMISSION OF THE OWNER.

CALTROP Telecom
960 WEST ELLIOT ROAD, SUITE 116
TEMPE, AZ 85284

Sprint NETWORK VISION PROJECT
5710 W. CHANDLER BLVD., SUITE 190,
CHANDLER, AZ 85226

CROWN CASTLE
6909 W. RAY ROAD, STE. 21,
CHANDLER, AZ 85226
www.crowncastle.com

KEEBLER-PHX198

PH80XC118-A

3150 N. ALMA SCHOOL ROAD
CHANDLER, AZ 85224

SHEET NAME

EXISTING/NEW SOUTH ELEVATIONS

SHEET NUMBER

C4

NOTES:

1. THIS DRAWING IS INTENDED TO DEPICT THE GENERAL LOCATION AND HEIGHT OF THE PROPOSED ANTENNAS ON THE PROPOSED TOWER. A STRUCTURAL DESIGN SHALL BE COMPLETED BY A PROFESSIONAL ENGINEER REGISTERED IN THIS STATE, CONCLUDING THAT THE PROPOSED TOWER IS STRUCTURALLY ADEQUATE TO RESIST THE PROPOSED LOADS.

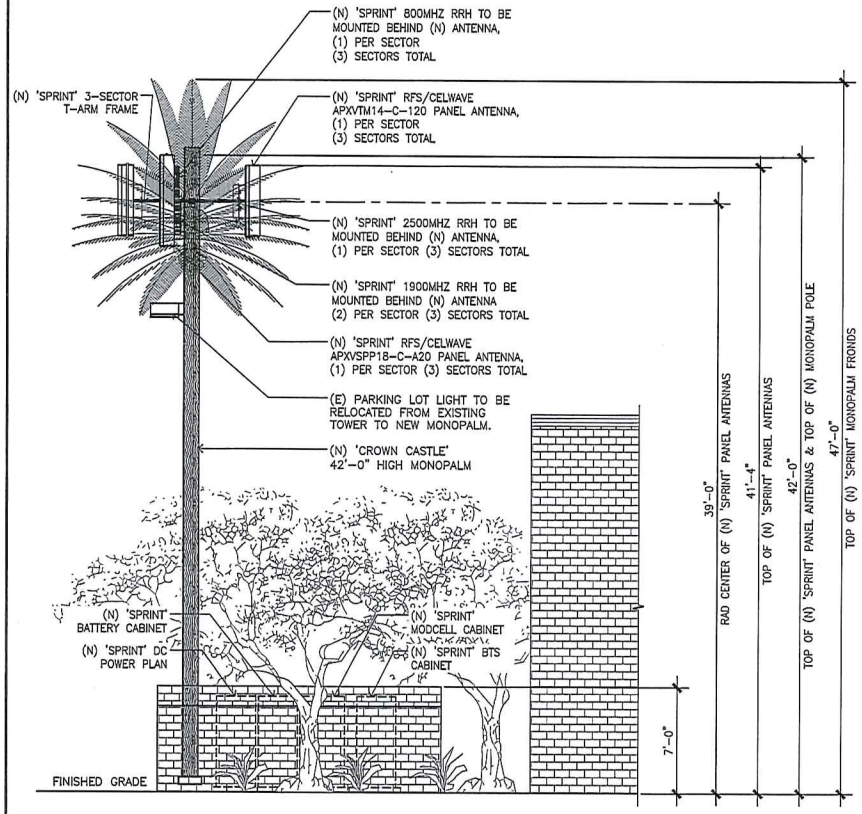

NEW WEST ELEVATION

SCALE 1/4"=1'-0" 0 2' 4' 8'

2

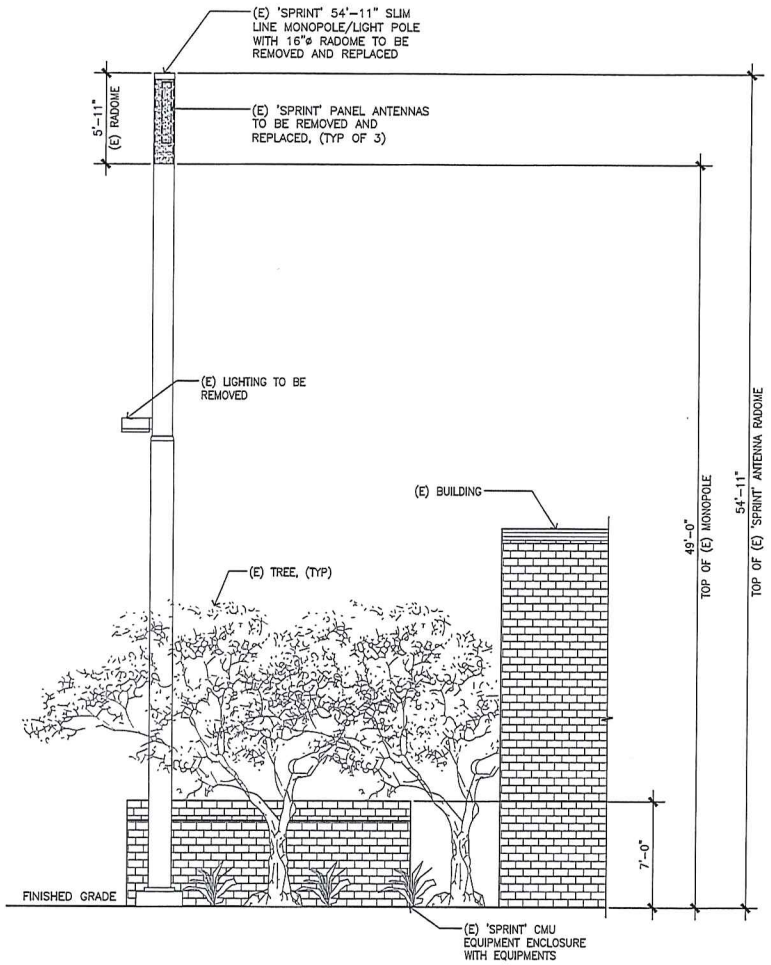

EXISTING WEST ELEVATION

SCALE 1/4"=1'-0" 0 2' 4' 8'

1

REV	DATE	DESCRIPTION
A	06/20/14	ISSUED FOR PERMIT
B	06/25/14	MONOPINE REDESIGN
C	07/29/14	MONOPALM REDESIGN
D	08/25/14	CLIENT COMMENTS
E	09/09/14	ISSUED FOR PERMIT
F	09/26/14	ISSUED FOR PERMIT
G	10/14/14	ISSUED FOR PERMIT
H	12/30/14	ISSUED FOR PERMIT

PROJECT NO.:	120-576.00
DRAWN BY:	CHECKED BY:
SDN	SA

THIS DRAWING IS COPYRIGHTED AND IS THE SOLE PROPERTY OF THE OWNER. IT IS PRODUCED SOLELY FOR USE BY THE OWNER AND ITS AFFILIATES. REPRODUCTION OR USE OF THIS DRAWING AND/OR THE INFORMATION CONTAINED IN IT IS FORBIDDEN WITHOUT THE WRITTEN PERMISSION OF THE OWNER.

CALTROP Telecom
960 WEST ELLIOT ROAD, SUITE 116
TEMPE, AZ 85284

Sprint NETWORK VISION PROJECT
5710 W. CHANDLER BLVD., SUITE 190,
CHANDLER, AZ 85226

CROWN CASTLE
6909 W. RAY ROAD, STE. 21,
CHANDLER, AZ 85226
www.crowncastle.com

KEEBLER-PHX198

PH80XC118-A

3150 N. ALMA SCHOOL ROAD
CHANDLER, AZ 85224

SHEET NAME

EXISTINGP/ROPOSED WEST ELEVATIONS

SHEET NUMBER

C5

NOTES:

1. THIS DRAWING IS INTENDED TO DEPICT THE GENERAL LOCATION AND HEIGHT OF THE PROPOSED ANTENNAS ON THE PROPOSED TOWER. A STRUCTURAL DESIGN SHALL BE COMPLETED BY A PROFESSIONAL ENGINEER REGISTERED IN THIS STATE, CONCLUDING THAT THE PROPOSED TOWER IS STRUCTURALLY ADEQUATE TO RESIST THE PROPOSED LOADS.

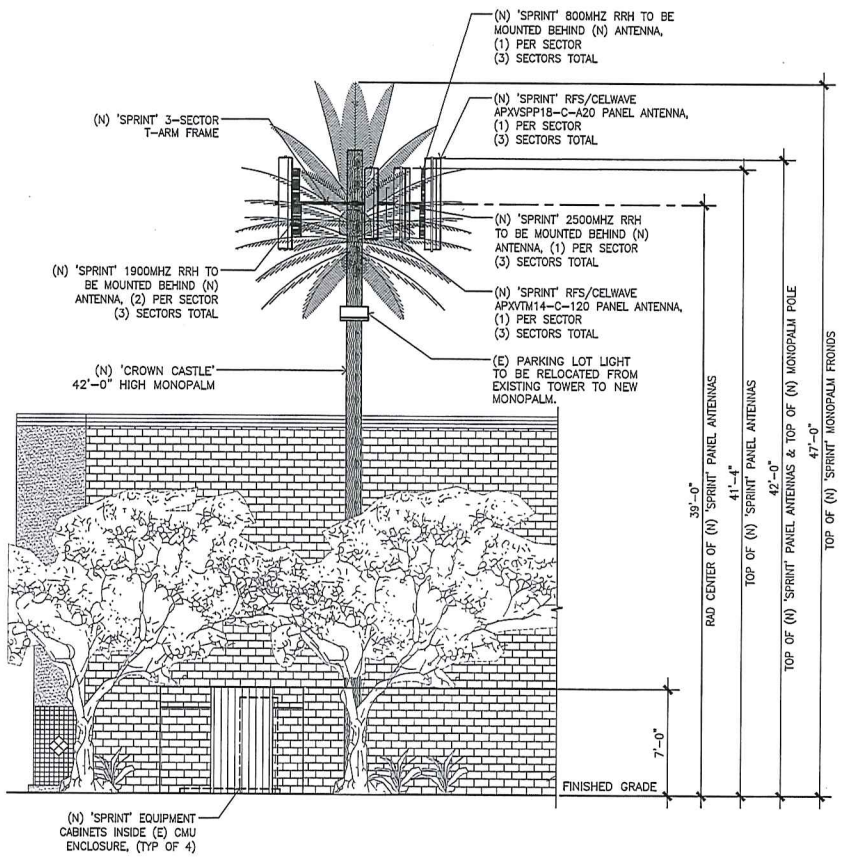

NEW NORTH ELEVATION

SCALE 1/4"=1'-0" 0 2' 4' 8'

2

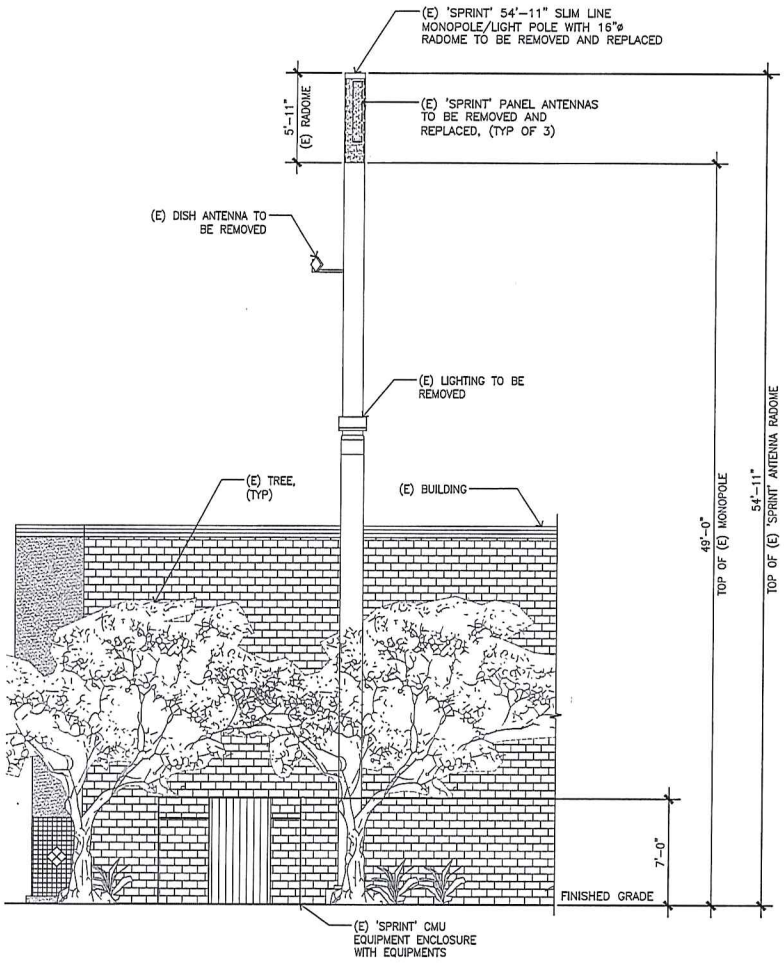

EXISTING NORTH ELEVATION

SCALE 1/4"=1'-0" 0 2' 4' 8'

1

REV	DATE	DESCRIPTION
A	06/20/14	ISSUED FOR PERMIT
B	06/25/14	MONOPINE REDESIGN
C	07/29/14	MONOPALM REDESIGN
D	08/25/14	CLIENT COMMENTS
E	09/09/14	ISSUED FOR PERMIT
F	09/26/14	ISSUED FOR PERMIT
G	10/14/14	ISSUED FOR PERMIT
H	12/30/14	ISSUED FOR PERMIT

PROJECT NO.: 120-576.00

DRAWN BY: SDN | CHECKED BY: SA

THIS DRAWING IS COPYRIGHTED AND IS THE SOLE PROPERTY OF THE OWNER. IT IS PRODUCED SOLELY FOR USE BY THE OWNER AND ITS AFFILIATES. REPRODUCTION OR USE OF THIS DRAWING AND/OR THE INFORMATION CONTAINED IN IT IS FORBIDDEN WITHOUT THE WRITTEN PERMISSION OF THE OWNER.

CALTROP Telecom
960 WEST ELLIOT ROAD, SUITE 116
TEMPE, AZ 85284

Sprint NETWORK VISION PROJECT
5710 W. CHANDLER BLVD., SUITE 190,
CHANDLER, AZ 85226

CROWN CASTLE
6909 W. RAY ROAD, STE. 21,
CHANDLER, AZ 85226
www.crowncastle.com

KEEBLER-PHX198

PH80XC118-A

3150 N. ALMA SCHOOL ROAD
CHANDLER, AZ 85224

SHEET NAME

EXISTING/NEW NORTH ELEVATIONS

SHEET NUMBER

C6

NOTES:

1. THIS DRAWING IS INTENDED TO DEPICT THE GENERAL LOCATION AND HEIGHT OF THE PROPOSED ANTENNAS ON THE PROPOSED TOWER. A STRUCTURAL DESIGN SHALL BE COMPLETED BY A PROFESSIONAL ENGINEER REGISTERED IN THIS STATE, CONCLUDING THAT THE PROPOSED TOWER IS STRUCTURALLY ADEQUATE TO RESIST THE PROPOSED LOADS.

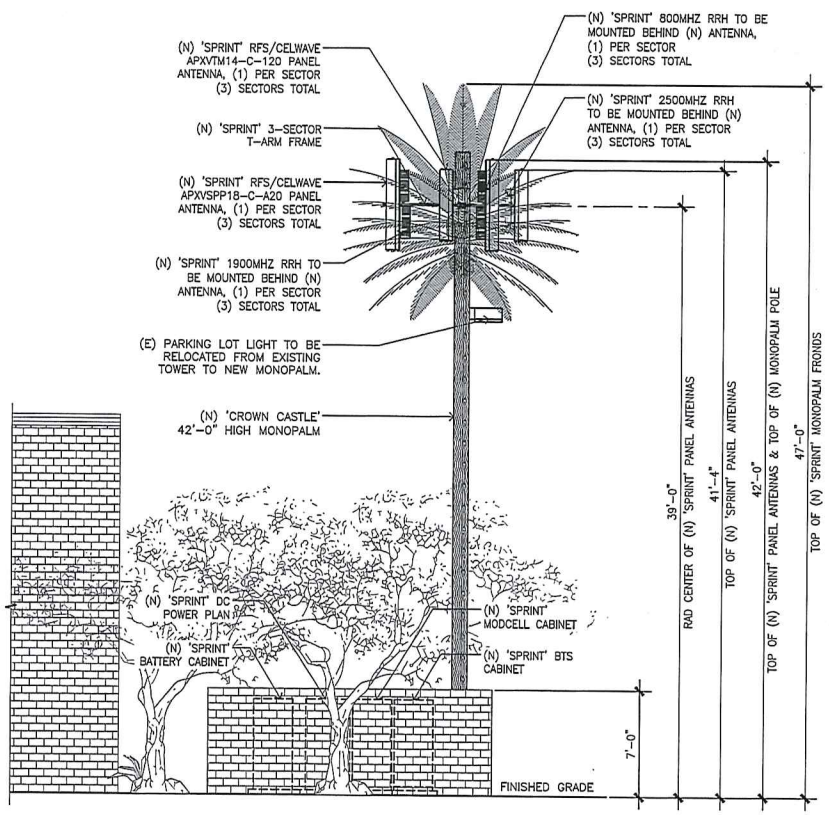

NEW EAST ELEVATION

SCALE 1/4"=1'-0" 0 2' 4' 8'

2

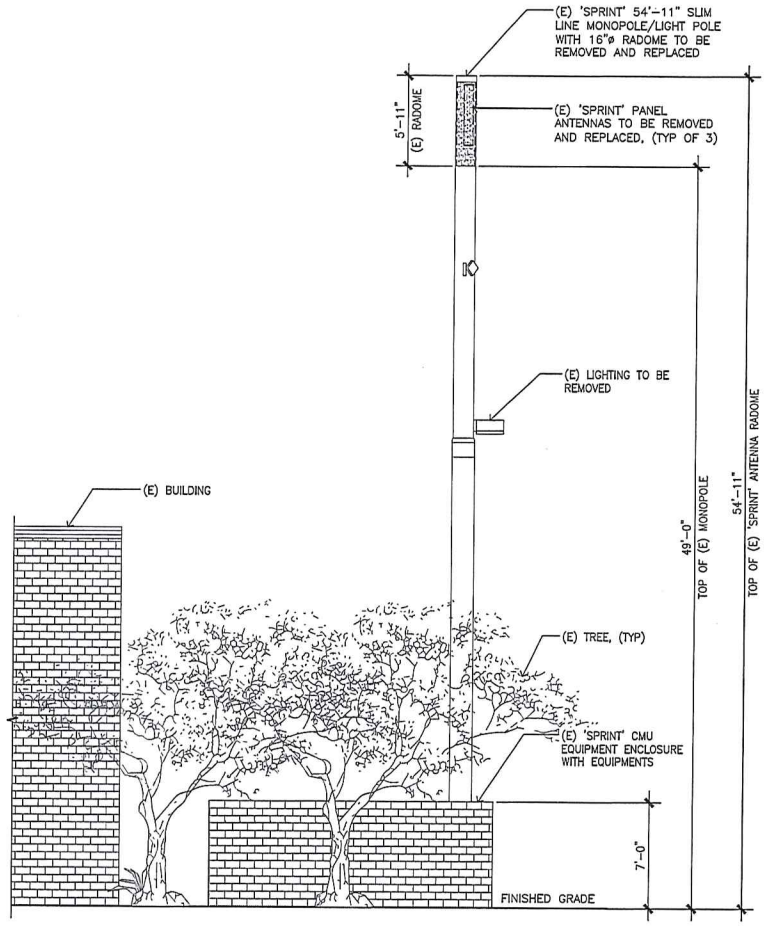

EXISTING EAST ELEVATION

SCALE 1/4"=1'-0" 0 2' 4' 8'

1

REV	DATE	DESCRIPTION
A	06/20/14	ISSUED FOR PERMIT
B	06/25/14	MONOPINE REDESIGN
C	07/29/14	MONOPALM REDESIGN
D	08/25/14	CLIENT COMMENTS
E	09/09/14	ISSUED FOR PERMIT
F	09/26/14	ISSUED FOR PERMIT
G	10/14/14	ISSUED FOR PERMIT
H	12/30/14	ISSUED FOR PERMIT

PROJECT NO.:	120-576.00
DRAWN BY:	CHECKED BY:
SDN	SA

THIS DRAWING IS COPYRIGHTED AND IS THE SOLE PROPERTY OF THE OWNER. IT IS PRODUCED SOLELY FOR USE BY THE OWNER AND ITS AFFILIATES. REPRODUCTION OR USE OF THIS DRAWING AND/OR THE INFORMATION CONTAINED IN IT IS FORBIDDEN WITHOUT THE WRITTEN PERMISSION OF THE OWNER.

CALTROP Telecom
960 WEST ELLIOT ROAD, SUITE 116
TEMPE, AZ 85284

Sprint NETWORK VISION PROJECT
5710 W. CHANDLER BLVD., SUITE 190,
CHANDLER, AZ 85226

CROWN CASTLE
6909 W. RAY ROAD, STE. 21,
CHANDLER, AZ 85226
www.crowncastle.com

KEEBLER-PHX198

PH80XC118-A

3150 N. ALMA SCHOOL ROAD
CHANDLER, AZ 85224

SHEET NAME

EXISTING/NEW EAST ELEVATIONS

SHEET NUMBER

C7

RFS APXVTM14-C-120

ANTENNA COLOR: LIGHT GRAY RAL7035
DIMENSIONS, HxWxD: 56" X 12.6" X 6.3"
WEIGHT: 56.2 LBS

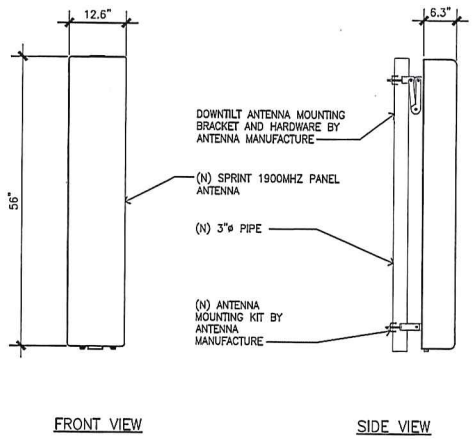

1900 MHZ ANTENNA DETAIL | 6

RFS APXVSPP18-C-A20

ANTENNA COLOR: LIGHT GRAY RAL7035
DIMENSIONS, HxWxD: 72" X 11.8" X 7"
WEIGHT: 57 LBS
CONNECTOR: (2) 7/16 DIN FEMALE

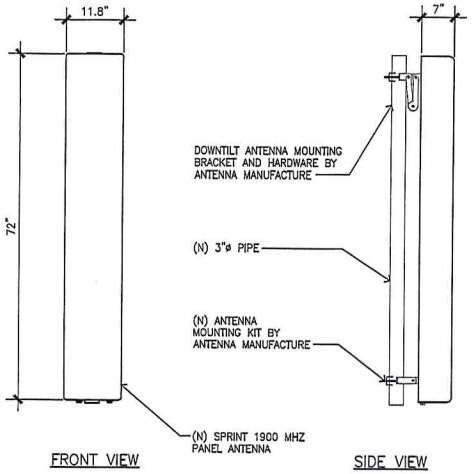

1900 MHZ ANTENNA DETAIL | 3

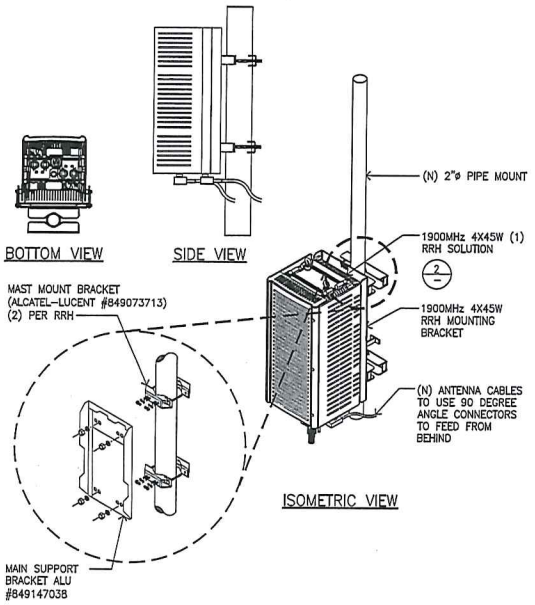

FULL ASSEMBLY WITH RRH | 1

TD-LTE RRH 2500 8x20 -60 RRH

MANUFACTURE: ALCATEL-LUCENT
MODEL: TD-LTE RRH 2500 8x20-60
WEIGHT: 70 LBS.

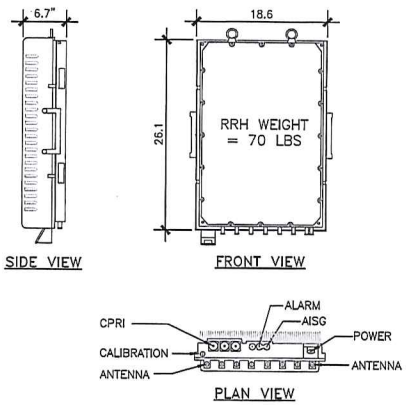

2500 MHz RRH | 7

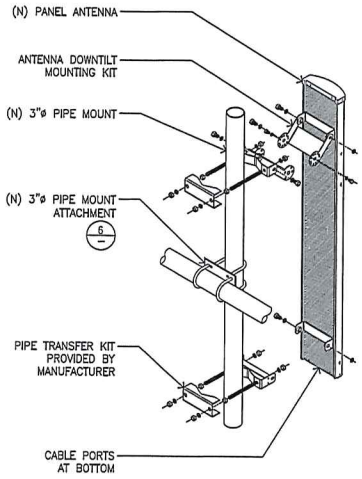

ANTENNA MOUNTING DETAIL | 5

TD-RRH8x20-25 RRH

MANUFACTURE: ALCATEL-LUCENT
MODEL: TD-RRH8x20-25
WEIGHT: 70 LBS.

RRH:
THE REMOTE RADIO HEAD LOCATED ON THE REMOTE SITE, PROVIDES THE TRANSCEIVER, MCPA AND FILTER FUNCTIONS TYPICALLY FOUND IN THE BTS.

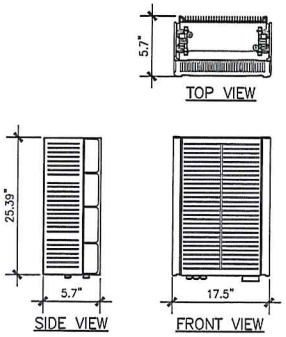

800 MHz RRH | 4

PCS 1900MHz 4X45W 65MHz RRH

MANUFACTURE: ALCATEL-LUCENT
MODEL: CDMA/LTE DUAL TECH 4X45W
WEIGHT: 59.5 LBS.

RRH:
THE REMOTE RADIO HEAD LOCATED ON THE REMOTE SITE, PROVIDES THE TRANSCEIVER, MCPA AND FILTER FUNCTIONS TYPICALLY FOUND IN THE BTS.

RRH CABINET	CLEARANCES MM (INCHES)	COMMENTS
FRONT	914 (36)	INSTALLATION ACCESS
REAR	50 (1.97)	0" CLR W/ MOUNTING BRACKETS.
RIGHT	300 (11.82)	AIR FLOW
LEFT	300 (11.82)	AIR FLOW
TOP	300 (11.82)	AIR FLOW
BOTTOM	355 (14)	CONDUIT ROUTING

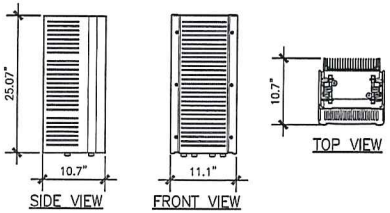

1900 MHz RRH | 2

REV	DATE	DESCRIPTION
A	06/20/14	ISSUED FOR PERMIT
B	06/25/14	MONOPINE REDESIGN
C	07/29/14	MONOPALM REDESIGN
D	08/25/14	CLIENT COMMENTS
E	09/09/14	ISSUED FOR PERMIT
F	09/26/14	ISSUED FOR PERMIT
G	10/14/14	ISSUED FOR PERMIT
H	12/30/14	ISSUED FOR PERMIT

PROJECT NO.: 120-576.00
DRAWN BY: SDN
CHECKED BY: SA

THIS DRAWING IS COPYRIGHTED AND IS THE SOLE PROPERTY OF THE OWNER. IT IS PRODUCED SOLELY FOR USE BY THE OWNER AND ITS AFFILIATES. REPRODUCTION OR USE OF THIS DRAWING AND/OR THE INFORMATION CONTAINED IN IT IS FORBIDDEN WITHOUT THE WRITTEN PERMISSION OF THE OWNER.

CALTROP Telecom
960 WEST ELLIOT ROAD, SUITE 116
TEMPE, AZ 85284

Sprint NETWORK VISION PROJECT
5710 W. CHANDLER BLVD., SUITE 190,
CHANDLER, AZ 85226

CROWN CASTLE
6909 W. RAY ROAD, STE. 21,
CHANDLER, AZ 85226
www.crowncastle.com

KEEBLER-PHX198

PH80XC118-A

3150 N. ALMA SCHOOL ROAD
CHANDLER, AZ 85224

SHEET NAME
EQUIPMENT DETAILS

SHEET NUMBER
C8

Sprint

The Now Network

PROJECT NARRATIVE

For

Sprint at Alma School and Elliott

3150 North Alma School Rd.
Chandler, AZ 85224
APN: 302-07-961

Submitted by:
Jeffrey Quinn
Crown Castle
6909 West Ray Road
Chandler, Arizona 85226
480.735.6902
Jeffrey.Quinn.Contractor@CrownCastle.com
Rev (1) 12/16/2014

Existing Conditions

Sprint is committed to providing high quality, reliable wireless coverage to residents, visitors and businesses in the Chandler community. Part of this on-going commitment includes updating equipment from time to time to keep up with local demand and eliminate lapses in geographical coverage. Sprint currently operates on an existing WCF located at 3150 North Alma School Road in downtown Chandler. In response to increasing demand for 4G technology and increased bandwidth usage from businesses, consumers and emergency services, Sprint would like to upgrade its equipment at this location to adequately handle both these needs and expected future demand. The WCF is currently located on a parcel zoned commercial.

Details of Request

Sprint is currently providing 3G services from an existing monopolm. This application is a request to allow an upgrade to 4G equipment in addition to an upgrade to the WCF from a monopole to monopalm. The WCF upgrade will not only more effectively blend with local landscaping, but is a necessity as the upgraded equipment will not fit into the current outdated canister configuration.

The new monopalm disguise will be "date" style palm with 65 fronds. The proposed WCF is designed to have a lower 42' tower height (13' shorter than existing pole) to have a more aesthetically natural feel within the surrounding environment. The coax cables will be routed within the trunk of the palm, while the antennas and remote radios heads will be located in the fronds, painted to match.

New ground equipment will be housed in an existing compound surrounded by a 7' high brick wall to match adjoining architecture. No changes to the ground space.

The existing WCF does not contribute to any increase in vehicular traffic in the area and does not require any water, or solid waste services. There are no negatives to the existence of this WCF operating at the current location.

One vehicle may access the wireless communication facility once or twice a month, or in the event of a technical breakdown. This vehicle will use the existing access and parking at this site.

Feasibility Study

As will be seen on the included propogation maps, Sprint's current coverage can not be duplicated by collocating on any other existing structures in the immediate area. Below is an inventory of all Wireless Telecommunication Facilities within a 1 mile radius at or above the same height as Sprint's existing site. Utility poles are not included due to the fact that SRP does not allow antennas and RRHs to on their poles which require power to the units.

1. American Tower Corp: Dobson High (LAT 33.362683, LON -111865108) 104' RAD center. (.88) miles North of the proposed WCF. Collocation at this monopole is not feasible due to the close proximity of a tower at Mountain View where Sprint currently has placements.

2. Crown Castle: Mountain View (LAT 33.364000, Lon -111.865153) 104' RAD center. (.92) miles North of proposed WCF. Upgrading existing Sprint equipment on this tower is not feasible due to the distance away from target area. Antennas at this location will not fulfill the coverage needs that the new WCF meets.

3. Crown Castle: Sirrine Elementary (LAT 33.342749, Lon -111-850417) 50' RAD center. (.75) miles South East of proposed WCF. Upgrading existing Sprint equipment on this tower is not feasible due to the distance away from target area. Antennas at this location will not fulfill the coverage needs that the new WCF meets.

4. Crown Castle: AZChand_022693 (LAT 33.348100, LON -111.858650) 20' RAD center. Rooftop mounted. (.25) miles South East of proposed WCF. This site is not feasible as the RAD center is too low for the new equipment to effectively fulfill the coverage needs of the new WCF.

5. Crown Castle: AZChand_37 (LAT 33.348195, LON -111.858008), 20' RAD center. Rooftop mounted. (.25) miles South East of proposed WCF. This site is not feasible as the RAD center is too low for the new equipment to effectively fulfill the coverage needs of the new WCF.

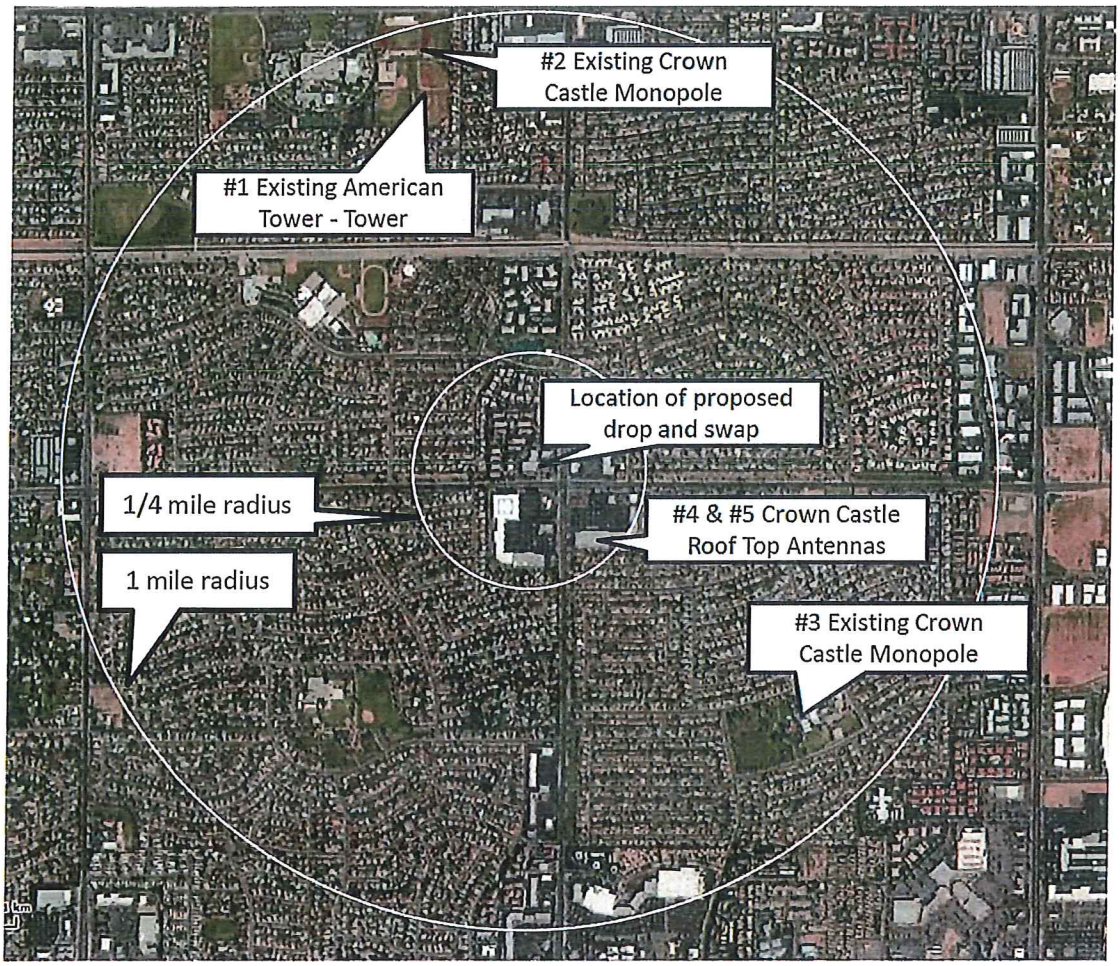

Conclusion

As individuals, businesses and emergency service providers rely more and more on advanced technology to operate in modern times, it is essential that wireless service providers keep up with growing demands for the benefit of the community. Sprint is committed to leading the way in providing the best possible coverage. The proposed upgrade from Sprint's current monopole with 3G service to an upgraded monopalm with 4G service is the best possible coverage solution, from both an appearance standpoint to a service one. The location is optimal because Sprint is currently operating at this site and the transition of service will be seamless to the consumer in the target area. Approving this application will allow Sprint to best serve the needs residents of Chandler.

See attached propogation map for coverage maps and how this upgrade will benefit the local community.

PH80XC118-A - KEEBLER-PHX198
3150 N ALMA SCHOOL ROAD, CHANDLER AZ 85224

CALTROP Telecom
900 WEST ELLIOT ROAD, SUITE 116
TEMPE, AZ 85284

SOUTHEAST ELEVATION

DATE: 09/12/14

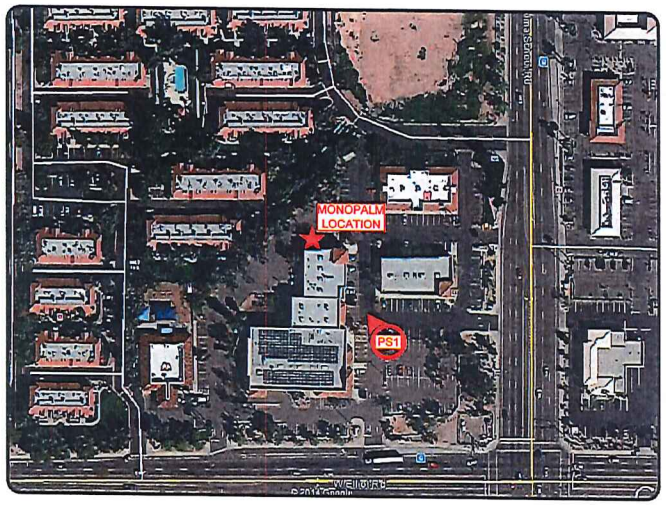

PH80XC118-A - KEEBLER-PHX198
3150 N ALMA SCHOOL ROAD, CHANDLER AZ 85224

CALTROP Telecom
960 WEST ELLIOT ROAD, SUITE 110
TEMPE, AZ 85284

EAST ELEVATION

DATE: 09/12/14

PH80XC118-A - KEEBLER-PHX198
3150 N ALMA SCHOOL ROAD, CHANDLER AZ 85224

CALTROP Telecom
960 WEST ELLIOT ROAD, SUITE 110
TEMPE, AZ 85284

NORTHEAST ELEVATION

DATE: 09/12/14

PH80XC118-A - KEEBLER-PHX198
3150 N ALMA SCHOOL ROAD, CHANDLER AZ 85224

CALTROP Telecom
960 WEST ELLIOT ROAD, SUITE 116
TEMPE, AZ 85284

NORTHWEST ELEVATION

DATE: 09/12/14