HOMEOWNER'S BUILDING
Permit Manual

Chandler • Arizona

August 2013

Development Services Division
(480) 782-3000

Table of Contents

Introduction 2

How to Obtain a Building Permit 3

Work Exempt from Permit 5

Plot Plan 7

Carport to Garage Conversion 8

Fences and Walls 10

Landscaping 11

Electrical and Gas Permits 15

Patio Covers 17

Accessory Buildings 22

Open-Air Ramadas or Gazebos 28

Arizona Rooms 28

Remodeling 29

Roofing 29

Stucco 29

Fireplaces 30

Room Additions 31

Storage Sheds 39

Swimming Pools and Spas 40

Pool Barrier Guidelines 42

List of Required Inspections 47

Appendix A 49

Appendix B 50

Appendix C 51

Introduction

This manual is designed for the Chandler homeowner. It is intended to:

- Identify work that requires a permit.
- Provide information concerning the requirements for obtaining a building permit.
- Provide examples of plans and details that will aid in project completion and code compliance.
- Inform homeowners of the requirements that must be met by them or contractors depending on who is performing the work.
- Answer some of the most commonly asked building code and compliance questions.
- All references are to the 2012 International Residential Code or Chandler City code unless noted otherwise. Chandler City Code can be found at: http://www.municode.com/Library/AZ/Chandler. Copies of the International Construction Code Series are available at the City Clerk's office.
- http://publicecodes.cyberregs.com/icod/index.htm

It is the responsibility of the homeowner to locate the property lines and to contact the Arizona Blue Stake Center with a request to have all underground utilities located. The Arizona Blue Stake Center can be reached at (602) 263-1100, (800) 782-5348 or 811. You need to call at least two days before you dig.

Please Note:

If the home is in a subdivision with a homeowners' association, the plans must be approved by the association *before* applying to the City for a building permit.

How to Obtain a Building Permit

The Development Services Construction Permit Counter is located at 215 East Buffalo Street in downtown Chandler.

Any construction requiring a permit also requires that a licensed contractor do the work, unless the owner-applicant performs the work. It is the responsibility of the homeowner or the contractor to obtain a building permit. If you own a home that you lease or rent to others, a licensed contractor is required to obtain a permit. Reference ARS 32-1121A located on the Building Permit Application.

If the home is in a subdivision with a homeowners' association, the plans must be approved by the association before applying to the City for a building permit.

Application

It will take a maximum of ten (10) business days to review your miscellaneous residential permit application. When applying for a permit, provide two sets of detailed plans that include:

- Legal description(s) and parcel number(s).
- Plot (site) plan, which must show property lines, all buildings on the lot and dimensions from any new structures to related property lines. This information is available at the Maricopa County Assessor's website: http://maps.mcassessor.maricopa.gov/maps/default.aspx
  Floor plan and building elevations.
- Structural details. Examples: footings, post to beam connections, truss calculations, Simpson Strong Tie part numbers, or other material information.
- Mechanical, plumbing, electrical plans, etc. (if applicable).

Fees

Building permit and plan check fees are charged according to the valuation of your project. The valuation is estimated based on the approximate cost to have a contractor do the job, including labor and materials. The City of Chandler Fee Schedule utilizes the August **2012 ICC** Building Valuation Data to determine the minimum value per square foot. If the valuation you provide is less than the valuation in the fee schedule adopted by the City, your permit fees will be based upon the City Fee Schedule. All valuation adjustments are computed as part of the plan review process. The minimum permit fee is $50.00, based on a valuation of $500.00 or less, and the permit fee increases from this point. Please note:

- Plan review fees are due at the time you submit your plans.

- Any project under construction or completed without a permit will be charged a double permit fee. Reference R108.6

Codes

The City of Chandler uses the following Code editions:

- 2012 International Building Code
- 2012 International Residential Code
- 2012 International Plumbing Code
- 2012 International Mechanical Code
- 2012 International Fuel Gas Code
- 2011 National Electrical Code
- 2012 International Energy Conservation Code
- 2012 International Existing Building Code

Please also refer to the Chandler City Code, on the Web at:
http://www.municode.com/Library/AZ/Chandler

- Chapter 29: Building Safety Regulations
- Chapter 35: Land Use and Zoning

Inspections

The inspections that are required are listed on the orange card provided when the permit is issued.

Inspections may also be scheduled on-line at www.chandleraz.gov/clics.

You can track your permit status, review plan review comments and inspection results.

In an ongoing commitment to improve customer service, the City of Chandler has installed an Interactive Voice Response system for building inspection requests. This telephone number is (480) 782-3100. Before calling, you will need:

- Touch-tone telephone.
- Your Permit number.
- An inspection code. These are located on your orange permit card.

The Interactive Voice Response system will prompt you through the steps to:

- Schedule an inspection.
- Cancel an inspection.

- Obtain inspection results.

Work Exempt from Permit

Per Section R105.2 Work Exempt from Permit of the 2012 International Residential Code, a building permit is not required for the following:

1. One-story detached accessory structures used as tool and storage sheds, playhouses and similar uses, provided the floor area does not exceed 120 square feet.
2. Fences not over 6 feet high.
3. Oil derricks.
4. Retaining walls that are not over 4 feet in height measured from the bottom of the footing to the top of the wall, unless supporting a surcharge or impounding Class I, II or IIIA liquids. City code restricts wall height for front and side yards. Contact the Planner of the Day at 480.782.3050 for more information.
5. Water tanks supported directly on grade if the capacity does not exceed 5,000 gallons and the ratio of height to diameter or width does not exceed 2:1.
6. Sidewalks and driveways not more than 30 inches above adjacent grade, and not over any basement or story below and are not part of an accessible route.
7. Painting, papering, tiling, carpeting, cabinets, counter tops and similar finish work.
8. Temporary motion picture, television and theater stage sets and scenery.
9. Prefabricated swimming pools accessory to a Group R-3 occupancy that are less than 24 inches deep, do not exceed 5,000 gallons and are installed entirely above ground.
10. Shade cloth structures constructed for nursery or agricultural purposes, not including service systems.
11. Swings and other playground equipment accessory to detached one- and two-family dwellings.
12. Window awnings supported by an exterior wall that do not project more than 54 inches from the exterior wall and do not require additional support of Group R-3 and U occupancies.
13. Non-fixed and movable fixtures, cases, racks, counters and partitions not over 5 feet 9 inches in height.

14. Replacing residential water heaters and water softeners, furnaces, pool or spa heating equipment, evaporative coolers, water treatment systems, circuit breakers and roof coverings where the replacement roof does not increase the load imposed upon the structural frame.

A permit is not required for ordinary repairs to structures, replacement of lamps or the connection of approved portable electrical equipment to approved permanently installed receptacles. Such repairs shall not include the cutting away of any wall, partition or portion thereof, the removal or cutting of any structural beam or load-bearing support, or the removal or change of any required means of egress, or rearrangement of parts of a structure affecting the egress requirements; nor shall ordinary repairs include addition to, alteration of, replacement or relocation of any standpipe, water supply, sewer, drainage, drain leader, gas, soil, waste, vent or similar piping, electric wiring or mechanical or other work affecting public health or general safety.

A permit is required for the installation of a photovoltaic system, a solar hot water heating system or a solar pool heating system. Submittal checklists are available online, http://www.chandleraz.gov/default.aspx?pageid=1061, through the City of Chandler Homeowner's Unified Development Manual Section 9 Building Permit and Construction Standards or at our Permit Counter located at 215 E Buffalo St.

Unless otherwise exempted, separate plumbing, electrical and mechanical permits will be required for the above exempted items. You may combine work into a single permit.

Exemption from the permit requirements of this code shall not be deemed to grant authorization for any work to be done in any manner in violation of this code or any other laws or ordinances of this jurisdiction.

Plot Plan

Every permit that requires a building plan must be accompanied by a plot plan. This can be obtained at the Maricopa County Assessor's website: http://maps.mcassessor.maricopa.gov/maps/default.aspx. A plot plan is a drawing of the lot showing the following:

- Location of property lines on all sides. The location of street side property lines will vary from 3 to 6 feet behind the sidewalk.
- All existing buildings on the lot, including their dimensions and distances to property lines.
- All proposed additions or structures with their dimensions and distances to property lines.
- Total square footage of the lot, existing buildings and proposed additions.
- Identify all required setbacks. Contact the Planner of the Day at 480.782.3050 for more information. See example Below.

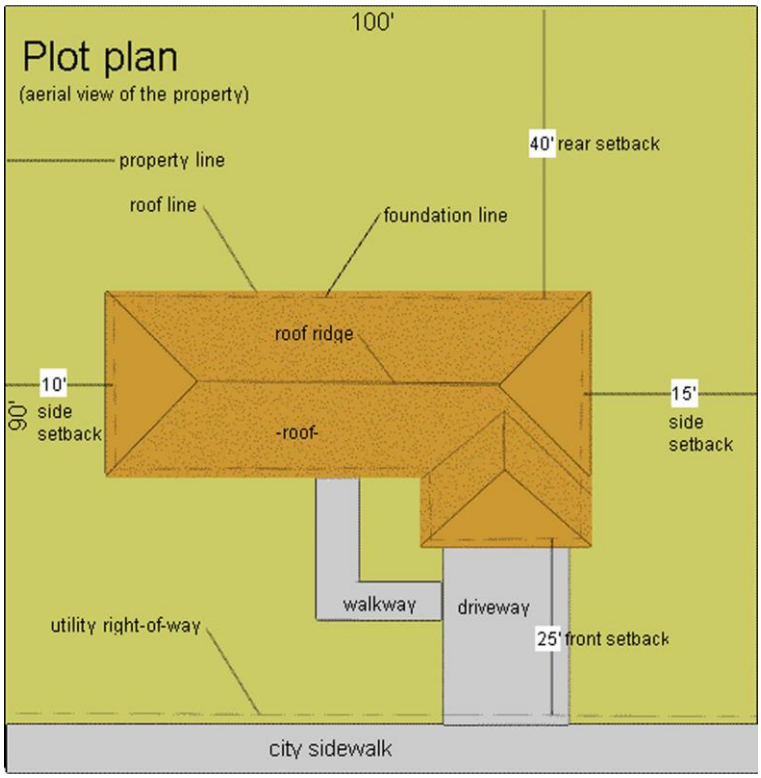

Note: To find the true property line, determine the right-of-way (ROW) width. This information is available from the City of Chandler, Transportation & Development Engineering Division Planner of the Day at (480) 782-3050.

Carport to Garage Conversion

This section applies to a building permit for a carport to garage conversion that is attached to a primary building. If this project is *not* attached to a primary building, please refer to the section on accessory buildings (p. 22). Reference 2012 IRC section R309 for additional information.

A carport is defined as a structure primarily used for parking vehicles, with 2 sides totally open, with a minimum clear dimension of 9 feet by 19 feet per parking space.

A garage is defined as a structure primarily used for parking vehicles, double garage with one 16-foot opening or two 8-foot openings (minimum), with a minimum clear dimension of 9 feet by 19 feet per parking space.

To obtain a building permit, please submit:

- Completed application.
- Two copies of the plot plan, showing the house, the lot and the carport with distances to property lines.
- Two copies of the building plan, showing applicable details.

The garage shall be separated from the residence and its attic by not less than 1/2 inch gypsum board applied to the garage side. Reference R302.6. If the dwelling is of masonry construction, it meets the occupancy separation required between the garage and dwelling. There must be a separation between the garage and living space above by a minimum 5/8 inch type X gypsum board.

Any door into the dwelling from the garage must be self-closing R302.5.1 and:

- Minimum 20-minute fire rated; or
- 1⅜-inch solid wood door; or
- Solid or honeycomb core steel doors not less than 1⅜ inches thick.

Under no circumstances shall a private garage have any opening into a room used for sleeping purposes. Carbon monoxide detectors shall be added per R315. Smoke alarms and Carbon monoxide detectors are required when performing Interior work that requires a permit, except work such as plumbing or mechanical (air conditioning). If they are not pre-existing throughout the whole house they must be added. Dual (CO & Smoke) alarms are available. They may be required to be interconnected if access is available. Ask your inspector. R314, 315, IEBC Ch 5-9.

Any main door to the outside must have a landing. The width of each landing shall not be less than the door served. Every landing shall have a minimum dimension of 36 inches measured in the direction of travel. Reference R311.3.

A switched exterior light is required at the exterior side of each egress door. Reference E3903.3. A light must also be provided inside the garage and the switch must be located at the interior door. Switches located on the exterior of a building shall be weatherproof. Reference E4001.7.

A minimum of one electrical outlet is required in a garage (in addition to any provided for laundry). All readily accessible electrical outlets shall have ground fault circuit interrupter (GFCI) protection. Reference E3902.2.

Any non-bearing exterior wall to be added does not need its own footing, but it shall have a bottom plate of treated wood or wood of natural resistance to decay. This bottom plate must be fastened to the slab in an approved manner and must be 4 inches for masonry veneer and 6 inches above the adjoining surface for other materials. Reference R404.1.6. Usually this requires that you either thicken your slab or build a stem wall. This detail is required as part of your submittal.

The garage conversion must be architecturally integrated with the existing residence. The drawings that are submitted need to clearly indicate what the wall and roof covering are on the existing residence as well as on the proposed garage.

Fences and Walls

It is the responsibility of the homeowner to locate the property lines and to contact the Arizona Blue Stake Center with a request to have all underground utilities located. The Arizona Blue Stake Center can be reached at (602) 263-1100, 811 or (800) 782-5348. You need to call at least two days before you dig.

All fences must be maintained a minimum of 3 feet from fire hydrants or utilities.

If a pool fence is being replaced, the pool area must remain secured during construction.

The maximum fence height is 7 feet in rear and side yards. The maximum fence height in front yards is 3 feet.

If you live on a street corner, whether or not it is an arterial, collector or local street, you must locate your fence so it does not pose as a safety hazard to pedestrians and drivers. City Standard Details on www.udm.chandleraz.gov (Street Standards C-246 to C-248) show the required clearances at corners. Call us at (480) 782-3000 if you have any questions.

A permit is required to build a fence over **6** feet high. Fences over 7 feet in height are not allowed per COC Zoning Ordinance.

A permit is required if the wall is used for retaining and is over 4 feet in height measured from the bottom of the footing to the top of the wall.

A permit is required if a fence is to be placed on top of a retaining wall.

4-inch thick walls are not an approved system to be used as retaining walls.

Regardless of height, all fences or walls require zoning clearance. Zoning staff review and approve the fence/wall placement and type of material. Call 480.782.3050 to speak to the Planner of the Day.

Landscaping

Landscaping does not generally require a permit. However, a permit is needed to install an irrigation system (but no plan review is needed). This permit allows inspectors to check the installation of the required anti-siphon valve or pressure backflow preventer and electrical timers.

The landscape inspector will need access to the main electrical panel for purposes of inspecting the circuit breaker. The circuit breaker must be compatible with the electrical panel brand. Electrical timers may not “piggy-back” on another circuit breaker.

Irrigation System Details

Per section P2902.4.3 of the 2012 International Residential Code, the potable water supply to lawn irrigation systems shall be protected against backflow by:

- An atmospheric-type vacuum breaker; or
- A pressure-type vacuum breaker; or
- A permanently attached hose connection vacuum breaker.

A valve shall not be installed downstream from an atmospheric vacuum breaker. Where chemicals are introduced into the system, the potable water supply shall be protected against backflow by a reduced pressure principle backflow preventer.

Installation

It is recommended that a licensed contractor install the anti-siphon/vacuum breaker assemblies. If someone other than a licensed contractor does the installation, make sure the assembly is positioned correctly with the arrow pointed in the direction of the water flow. The use of lead solder is prohibited.

Any aboveground piping before the anti-siphon/vacuum breaker assembly may be copper or galvanized pipe. If PVC is used, it must be protected from physical damage and be sunlight resistive. All connecting piping installed in the ground before the anti-siphon/vacuum breaker must be buried at least 12 inches deep.

Vacuum breakers shall be installed a minimum of 6 inches above the flood level rim of the fixture or device in accordance with Section 608.15.4 of the 2012 International Plumbing Code. The flood level rim of hose connections shall be the maximum height at which any hose is utilized.

Type of Assembly

Atmospheric Anti-Siphon Assembly
Atmospheric anti-siphon assemblies work on the principle of atmospheric pressure. Once the irrigation valve shuts off or if there is a sudden drop in water pressure, a float disc in the assembly drops down to prevent back flow.

- Pipe-applied atmospheric-type vacuum breakers shall conform to ASSE 1001 or CSA B64.1.1.
- Hose connection vacuum breakers shall conform to ASSE 1011, ASSE 1019, ASSE 1035, ASSE 1052, CSA B64.2, CSA 64.2.1, B64.2.1.1, CSA B64.2.2 or CSA B64.7.

These devices shall operate under normal atmospheric pressure when the critical level is installed at the required height. An atmospheric anti-siphon assembly shall be installed at least 6 inches above all downstream piping and sprinkler heads, bubblers or drip emitters. This will keep the vacuum breaker from being subjected to back pressure or drainage.

Pressurized Anti-Siphon Assembly
Pressure-type vacuum breakers shall conform to ASSE 1020 or CSA B64.1.2, and spill-proof vacuum breakers shall comply with ASSE 1056. These devices are designed for installation under continuous pressure conditions when the critical level is installed at the required height. Pressure-type vacuum breakers shall not be installed in locations where spillage could cause damage to the structure. A pressurized anti-siphon assembly provides great flexibility because only one assembly is needed regardless of the number of control valves. The control valves may be placed above or below ground. A pressurized anti-siphon assembly must be in an upright position and at least 12 inches above all downstream piping and sprinkler heads, bubblers or drip emitters. A pressurized anti-siphon assembly includes shut-off valves and test ports that facilitate testing to determine proper operation.

Atmospheric Antisiphon Valve

Pressurized Antisiphon Valve

System Connection

Before installing an underground irrigation system, decide where to make the water source connection. Water professionals recommend the following four options shown.

Whichever option you choose, it is recommended that the anti-siphon/vacuum breaker assembly be installed with its own gate valve. This enables the irrigation system water to be shut off without disrupting water service into the home. Turning off the water at the meter is not recommended. This may cause a leak at the supply line coupling to the meter. All leaks on the home side of the water meter are the owner's responsibility to repair.

Option 1

Connect to the capped extension (copper tee) on the riser (water supply going into the home).

Option 2

Connect to the water faucet line above the riser. An extension tee is added between the faucet and the waterline.

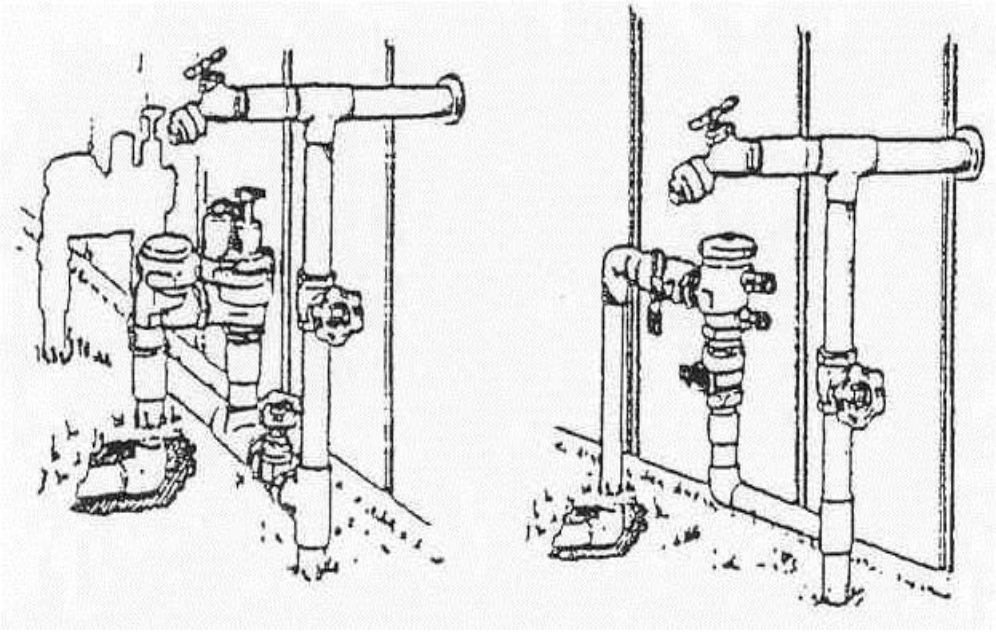

Option 3

Connect to the water service line on the home side of the water meter. At the point of connection, the irrigation line must be 12 inches deep. The connection should be made at least 4 feet on the home side of the meter.

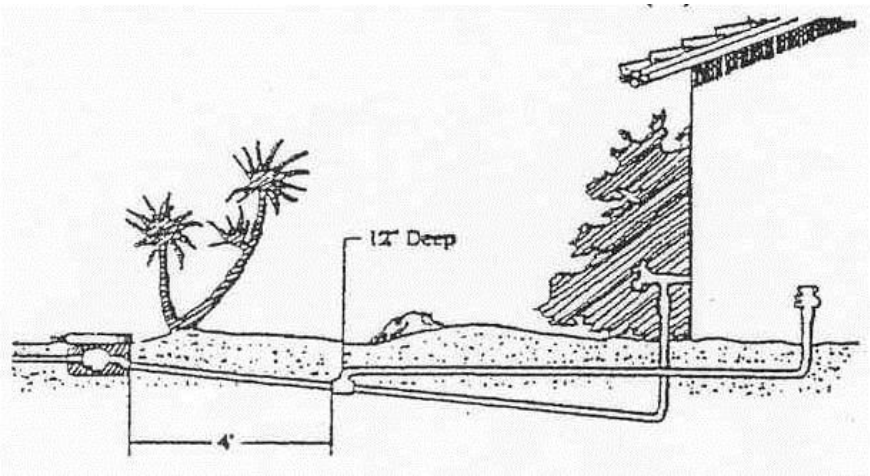

Option 4

Connect to the water faucet line at the back or side of the home. An extension tee is added between the faucet and the waterline. This faucet line is ½ inch in diameter. Since this waterline is generally smaller than the front water faucet line (¾ inch), the irrigation system will have less water pressure. In addition, if the home has a water softener, this faucet line will contain conditioned water, which may be harmful to plants.

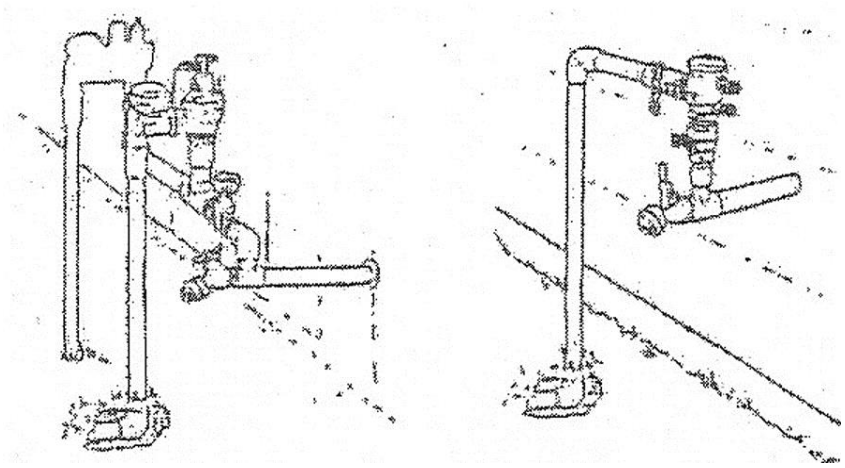

Electrical and Gas Permits

Electrical Permits (200 amp maximum)

Clearly indicate the size and type of conductors (wire) being used, i.e. #6 THHN. Also, indicate the size and type of conduit and the proposed burial depth. Indicate the length of all runs above ground or through an unconditioned space such as an attic. Reference E3406 and G2411.

Provide a panel schedule showing the existing and new breakers if you propose adding a sub-panel. Load calculations may also be required. (See Appendix B at the back of this booklet for a calculation form that you can use to simplify the process.)

Provide grounding electrode conductor and grounding electrode. Reference E3603.4 and E3608.1:

- Grounding electrode is a metallic rod driven into the earth.
- Grounding electrode is a minimum of 8 feet long.
- Grounding electrode conductor must terminate on rod with an acorn clamp.
- Grounding electrode conductor must be a minimum solid #4 AWG bare copper conductor.

If UFER (concrete encased grounding electrode) is provided, the previous items do not apply. The UFER shall be 20 feet of solid #4 AWG bare copper conductor in concrete with solid #4 AWG bare electrode conductor to the service entrance section. Reference NEC section 250.

Water Bond
Provide a minimum #4 AWG bare copper conductor connected with a water bond clamp to the cold water supply at an outside hose bib or at the cold water piping of the water heater. This must be readily accessible.

Gas Bond
Provide a minimum #4 AWG bare copper conductor connected on the user side to the gas line with an approved clamp that is readily accessible.

All overhead services must have a point of attachment on the weather head mast.

All breakers inside the service panel must be compatible with the panel cover (dead front) and permanent ink must be used.

Gas Permits

Reference Chapter 24 of the IRC. When adding a gas line inside the residence, or attaching to an existing gas stub out, you need to:

- Provide a gas riser schematic that shows the length of all sections of the gas line, starting at the gas meter. Show all existing appliances, as well as any proposed additions.
- Provide the total BTU rating of each appliance.
- Provide each line size.
- Provide each line type.

If you propose adding a new gas line from the meter you need to:

- Show the length of all sections of the gas line, starting at the gas meter.
- Provide the total BTU rating of each appliance.
- Provide each line size.
- Provide each line type.
- Provide trench depth / burial depth.

Tests of systems shall be performed at no less than 1-1/2 times the proposed maximum working pressure, but no less than 3 psig. Most residential systems (including propane) will be at 3 psig unless you have a high-pressure system above 2.0 psi. Test duration shall not be less than 10 minutes in single-family homes or 30 minutes in other installations. Reference G2417.

All tests must be made through the open valve and flex line. The flex line must be capped at the appliance connection.

The use of heat fusion PE (polyethylene) plastic pipe requires a minimum 12-inch deep trench and a continuous insulated 18-gauge copper tracer wire. PE is not allowed for use beneath any slab, i.e. pool deck, patio, sidewalk, and driveway.

All metal gas piping used in underground systems shall have factory-applied coating, and schedule 40 minimum weight. Reference G2414.4.2

Field wrapping is limited to fittings and short sections of piping, where the factory wrap has been damaged or stripped for threading or welding.

Galvanized fittings or piping is prohibited in underground systems.

Patio Covers

Posts for patio covers will require a footing. The minimum footing size is 18” square and 12” below grade.

Rafters must be sized according to tables in the 2012 International Residential Code, and beams must be sized to carry the calculated roof loads. (Laminated beams may not be used in exposed locations unless they are approved for exterior use.) Reference R317.1.5.

Ledgers supporting rafters must be secured directly to existing wall framing members.

Rafters may not be attached directly to the existing fascia or to roof truss tails. They must bear on the existing wall top plate or attach directly to the house by ledger board that butts directly against vertical studs. (Any stucco or gypsum board covering the studs must be removed.) Reference R311.5.1.

The minimum required roof slope is:

Material	**Slope**
Asphalt Shingles	2:12
Clay Tile	2.5:12
Roll Roofing	1:12

The minimum roof slope varies depending on the type of roofing material you propose to use. The type of roofing material shall be indicated on your drawings as well as the roof slope. Reference R905.There shall be a mechanical path of load transfer from the roof to the foundation. Show all uplift rated connectors, the manufacturer and part number.

The minimum height from the finished floor to the bottom of any beam is 6 feet, 8 inches.

The drywall installed on the ceiling can be either Soffit or Brown Board. Where the roof framing is 12 inches on center, Greenboard may be used.

Please refer to the patio cover details on the following pages. You may copy these details and use them as part of your submittal.

Metal patio covers shall be bonded to the pool equipotential bonding per 2011 NEC 250 and IRC E4204.2.

At least one receptacle outlet that is accessible while standing at grade level and located not more than 6 feet, 6 inches above grade, shall be installed outdoors at the front and back of each dwelling unit having direct access to grade. Balconies, decks, and porches that are accessible from inside of the dwelling unit shall have at least one

receptacle outlet installed within the perimeter of the balcony, deck, or porch. The receptacle shall be located not more than 6 feet, 6 inches above the balcony, deck, or porch surface.

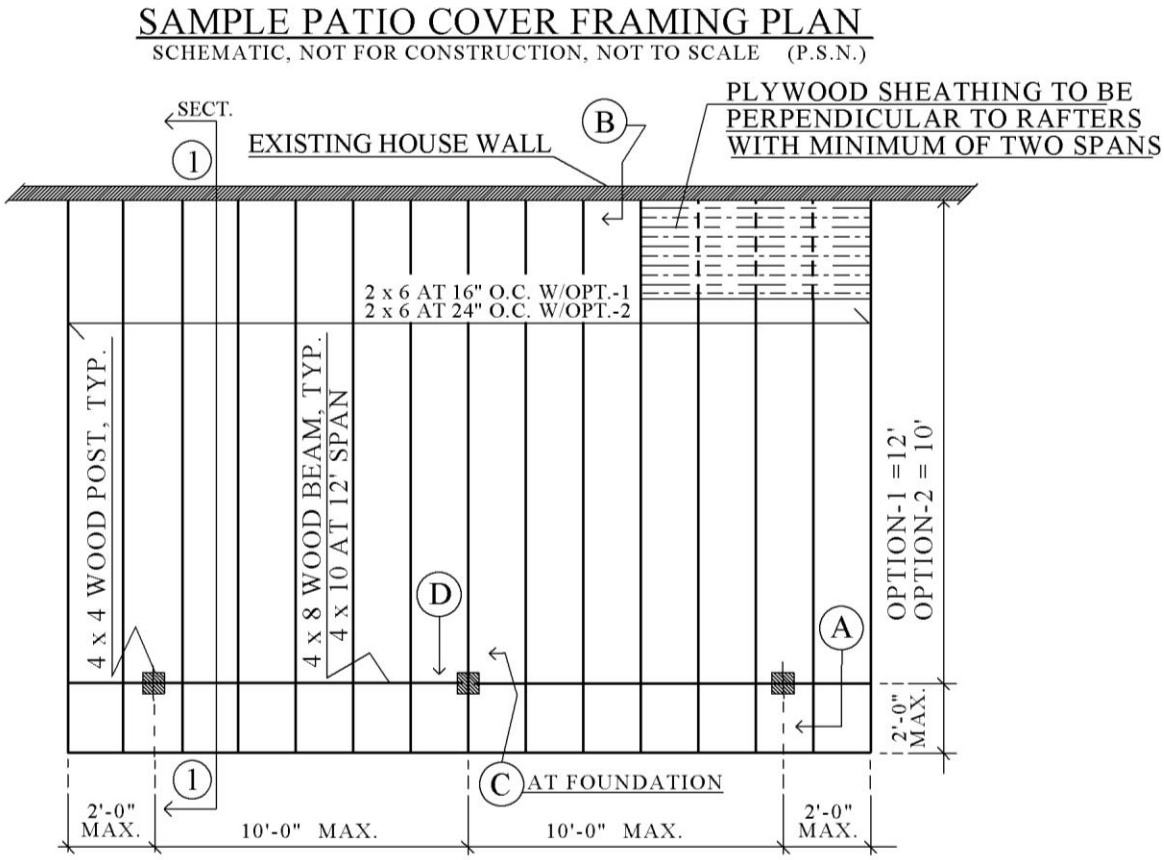

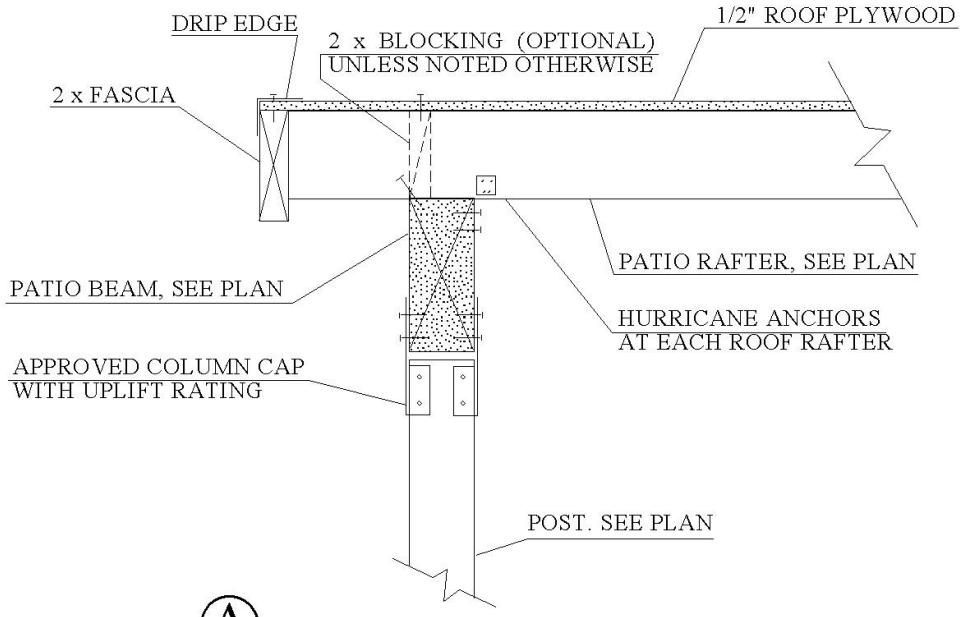

A

PATIO COVER COLUMN TO BEAM

SCHEMATIC, NOT FOR CONSTRUCTION, NOT TO SCALE (P.S.N.)

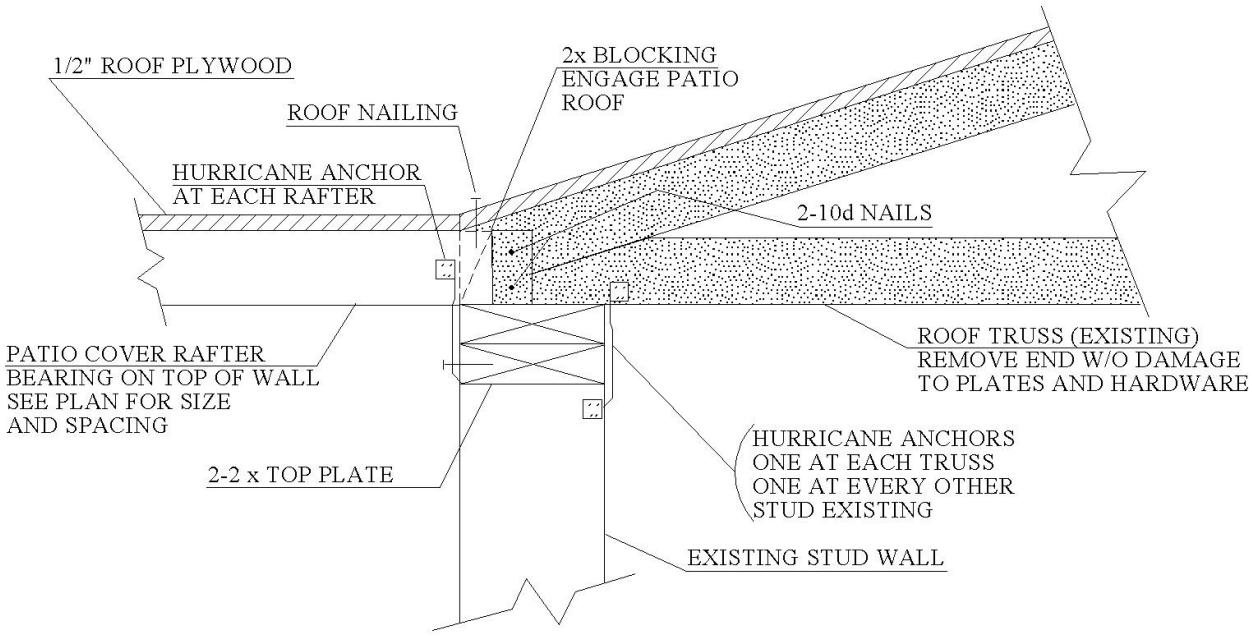

B

PATIO COVER RAFTER AT EXISTING WALL

SCHEMATIC, NOT FOR CONSTRUCTION, NOT TO SCALE (P.S.N.)

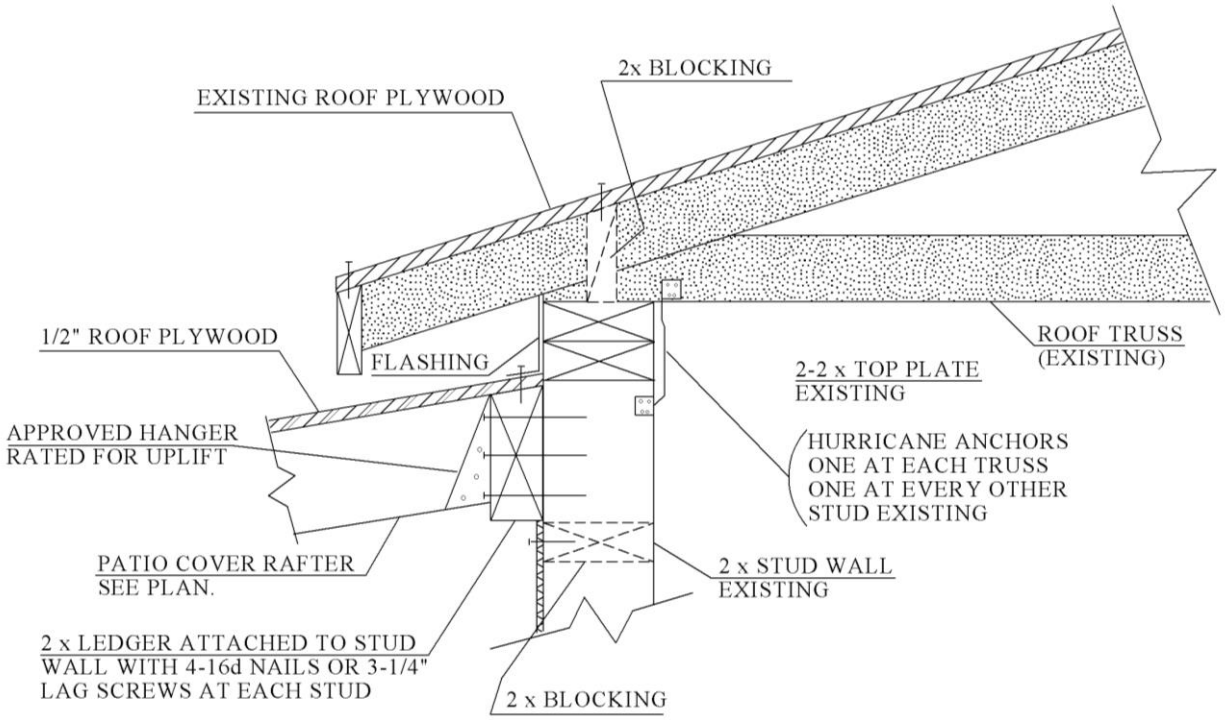

B ALT.

PATIO COVER RAFTER AT EXISTING WALL

SCHEMATIC, NOT FOR CONSTRUCTION, NOT TO SCALE (P.S.N.)

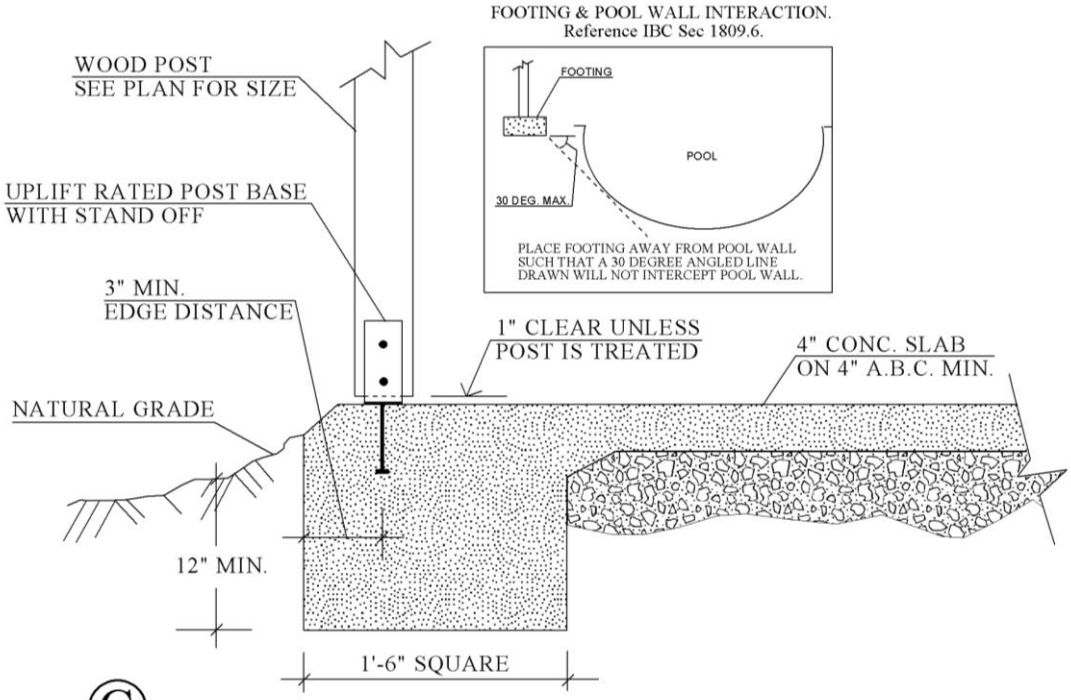

C

FOOTING AT PATIO COVER POST

SCHEMATIC, NOT FOR CONSTRUCTION, NOT TO SCALE (P.S.N.)

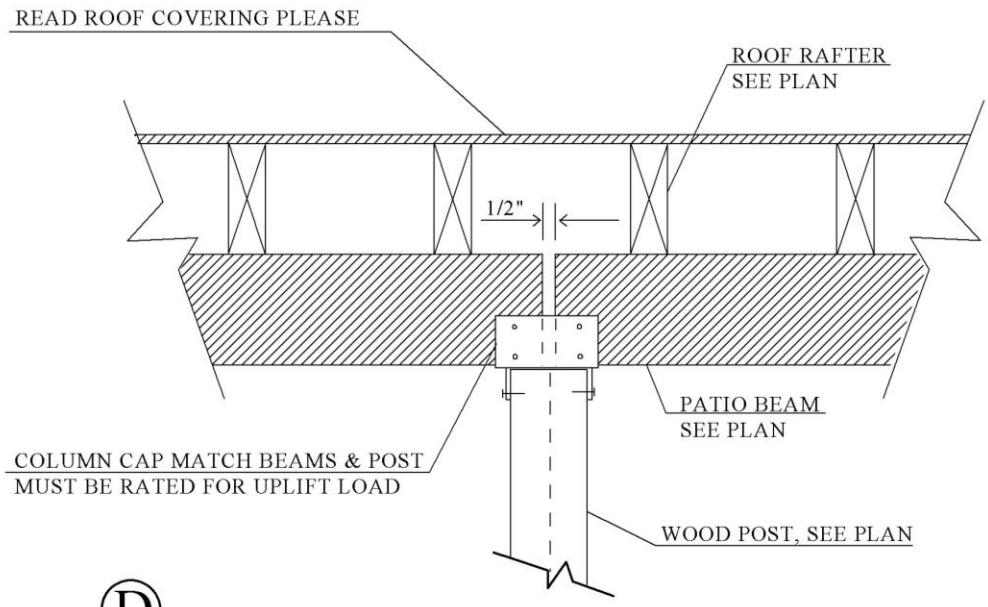

D

BEAMS AT CENTER POST

SCHEMATIC, NOT FOR CONSTRUCTION, NOT TO SCALE (P.S.N.)

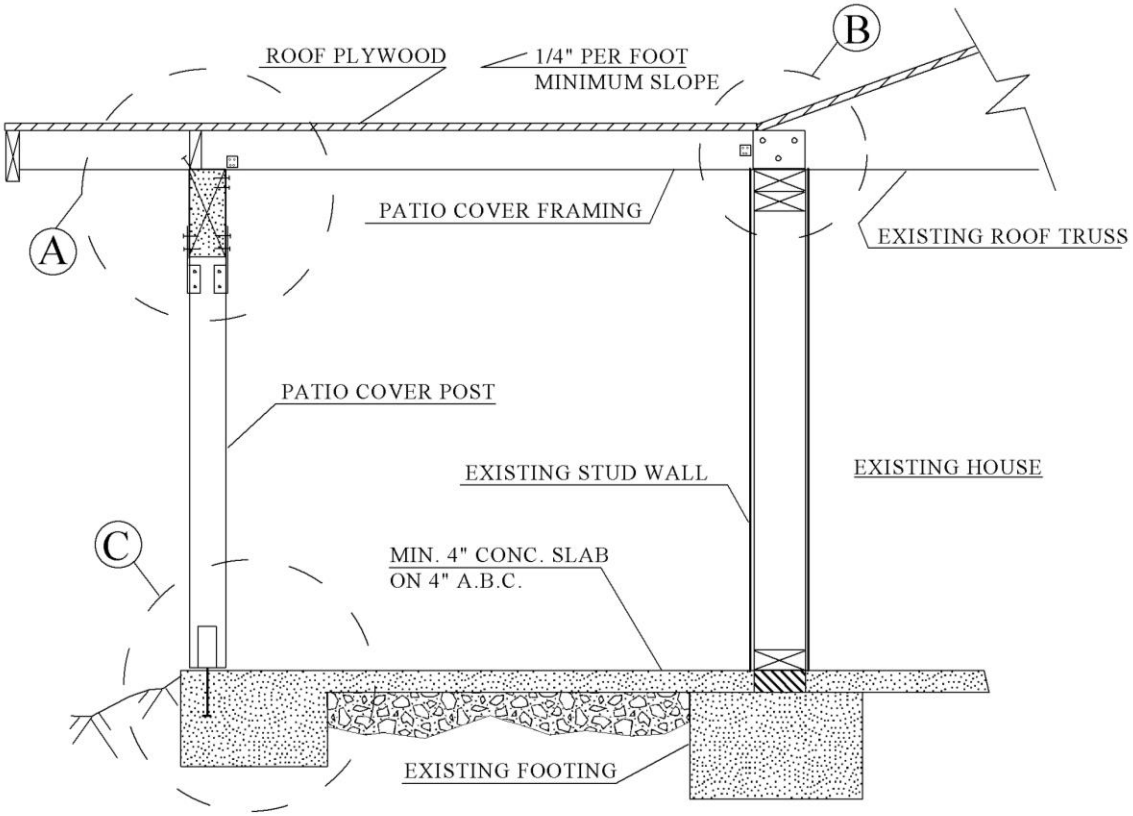

1 1

SECTION AT PATIO COVER

SCHEMATIC, NOT FOR CONSTRUCTION, NOT TO SCALE (P.S.N.)

Accessory Buildings

An accessory building is a building that is subordinate and customarily incidental to the main building on the same lot, including a private garage, but not involving any activity used for commercial or dwelling purposes. Only one accessory building is allowed per lot. http://www.municode.com/Library/AZ/Chandler

To obtain a building permit, please submit:

- Completed application.
- Two copies of the plot plan showing the house on the lot and the proposed accessory building with distances to the property lines.
- Two copies of the building plan, showing applicable details. At a minimum, a foundation plan, a roof framing plan, a floor plan and wall sections are required.

An accessory building must:

- Be located at the rear of the principal building, and shall not occupy more than 30 percent of the rear area.
- Meet the minimum side and rear yard setbacks required for the district in which it is located. Setbacks/separations required by the Building Code also apply.

Accessory buildings in single-family residential districts shall not exceed 15 feet to midpoint of roof structure, as required by the City of Chandler Zoning Code.

An accessory building cannot be constructed in advance of the principal structure. It cannot be used for dwelling purposes. Indicate the proposed use of your building on your drawings.

Accessory buildings shall be architecturally compatible with the principal building. Provide information on your drawings indicating the wall and roof covering of the existing principal building.

Prior to building, check with local utility companies for any easement locations.

Utilities may be provided in accessory buildings to include mechanical, plumbing, water sewer, heating, air conditioning, electrical or gas. If your accessory building includes conditioned space, see the requirements on page 32 of the section regarding Room Additions in this manual for the minimum energy efficiency requirements.

Provide a panel schedule showing the existing and new breakers if you propose adding a sub-panel. Load calculations may also be required. (See Appendix B at the back of this booklet for a calculation form that you can use to simplify the process.)

If you plan to use engineered roof trusses on your project, you must submit sealed engineered roof truss calculations with your permit application. Open-web floor truss and manufactured I-joist floor assemblies over 80 square feet require a ½" minimum gypsum board membrane. Reference R501.3.

Enclosed attics and enclosed rafter spaces formed where ceilings are applied directly to the underside of roof rafters shall have cross ventilation for each separate space by ventilating openings protected against the entrance of rain or snow. Ventilating openings shall be provided with corrosion-resistant wire mesh with ⅛-inch minimum to ¼-inch maximum openings.

The total net free ventilating area shall not be less than 1 to 150 of the area of the space ventilated, except that the total area is permitted to be reduced to 1 to 300, if at least 40 percent and not more than 50 percent of the required ventilating area is provided by ventilators located in the upper portion of the attic or rafter space. Upper ventilators shall be located no more than 3 feet below the ridge or highest point of the space, measured vertically, with the balance of the required ventilation provided by eave or cornice vents. Where the location of wall or roof framing members conflicts with the installation of upper ventilators, installation more than 3 feet below the ridge or highest point of the space shall be permitted.

Unvented attics are now allowed under limited circumstances 2012 IRC Section 806.5. Call our plan reviewers for assistance at (480) 782-3000.

You must include roof vent calculations in your drawings.

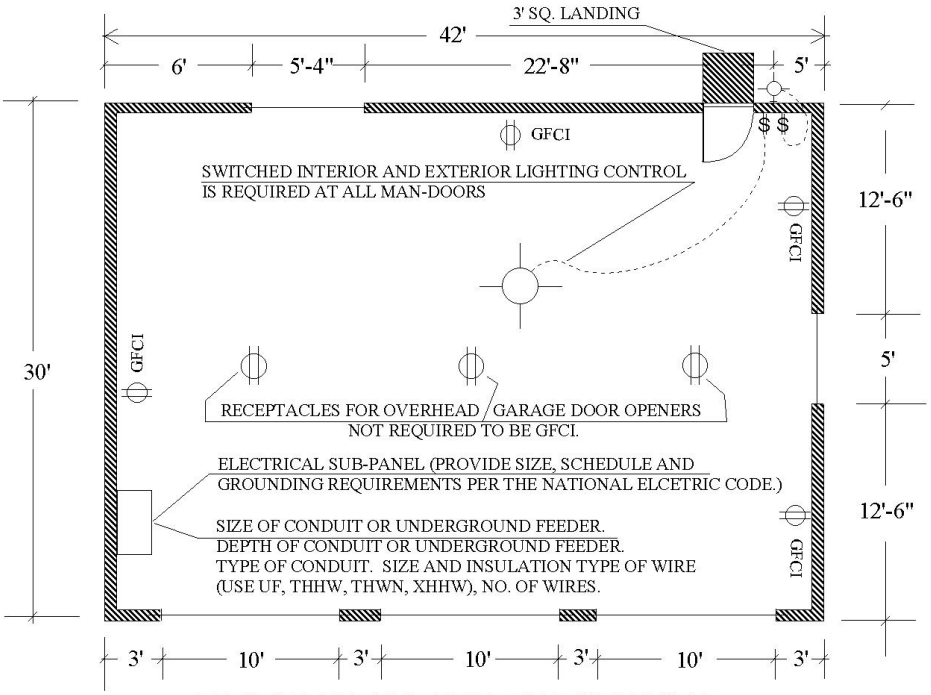

FLOOR PLAN AND ELECTRICAL
FOR TYPICAL ACCESSORY BUILDING
SCHEMATIC, NOT FOR CONSTRUCTION, NOT TO SCALE

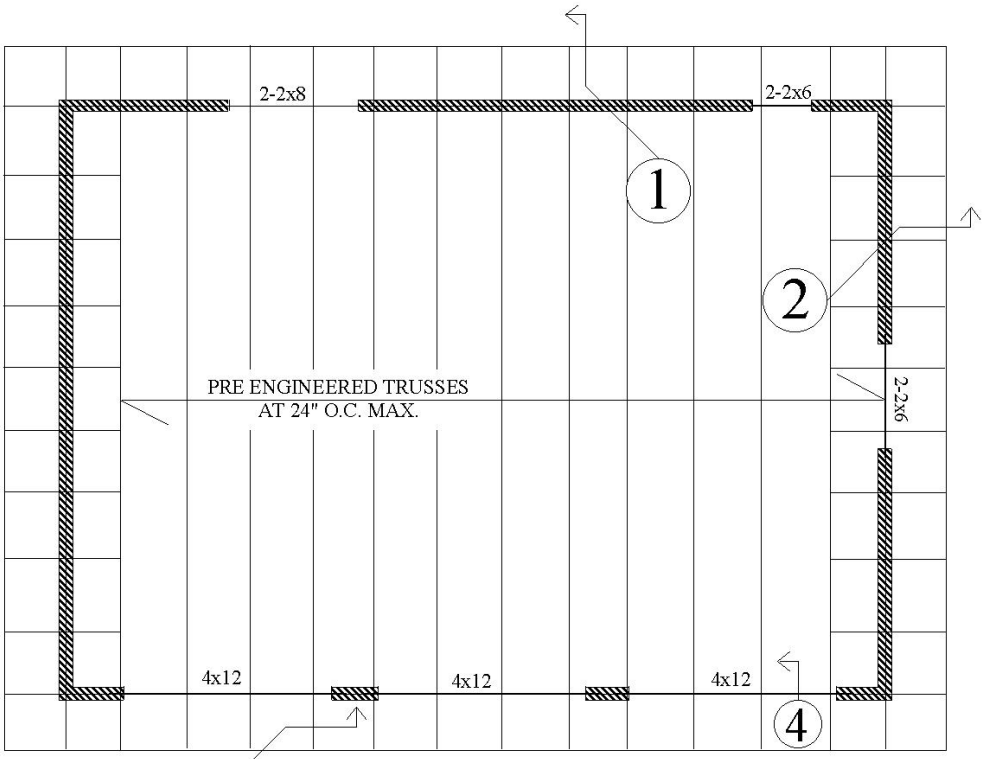

TYPICAL ROOF FRAMING PLAN

SCHEMATIC, NOT FOR CONSTRUCTION, NOT TO SCALE (P.S.N.)

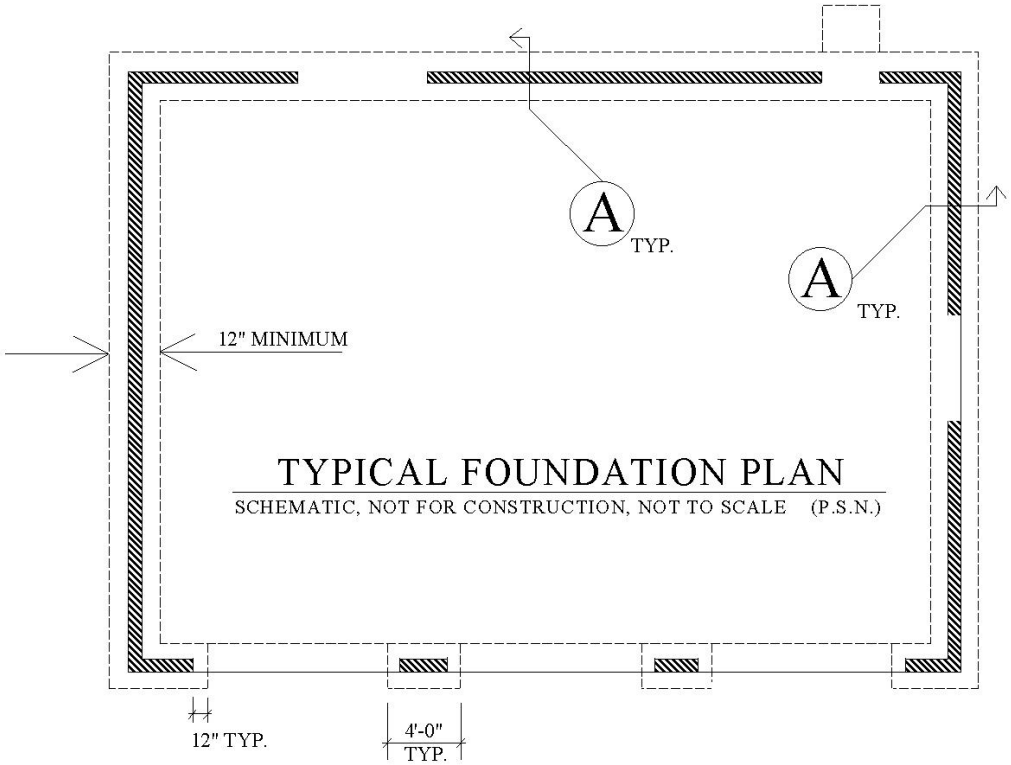

TYPICAL FOUNDATION PLAN

SCHEMATIC, NOT FOR CONSTRUCTION, NOT TO SCALE (P.S.N.)

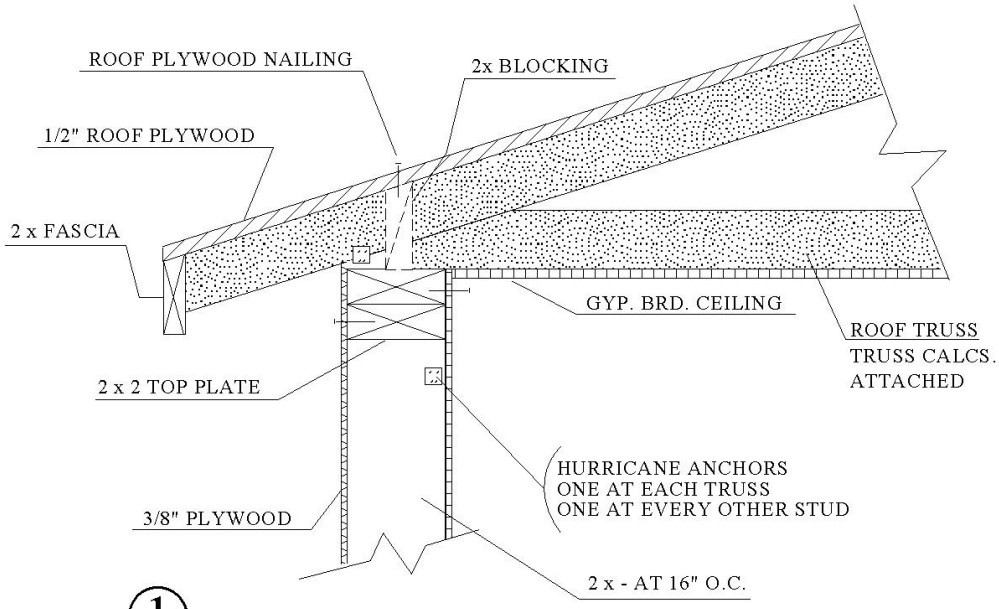

1 ROOF TRUSS AT STUD WALL

SCHEMATIC, NOT FOR CONSTRUCTION, NOT TO SCALE (P.S.N.)

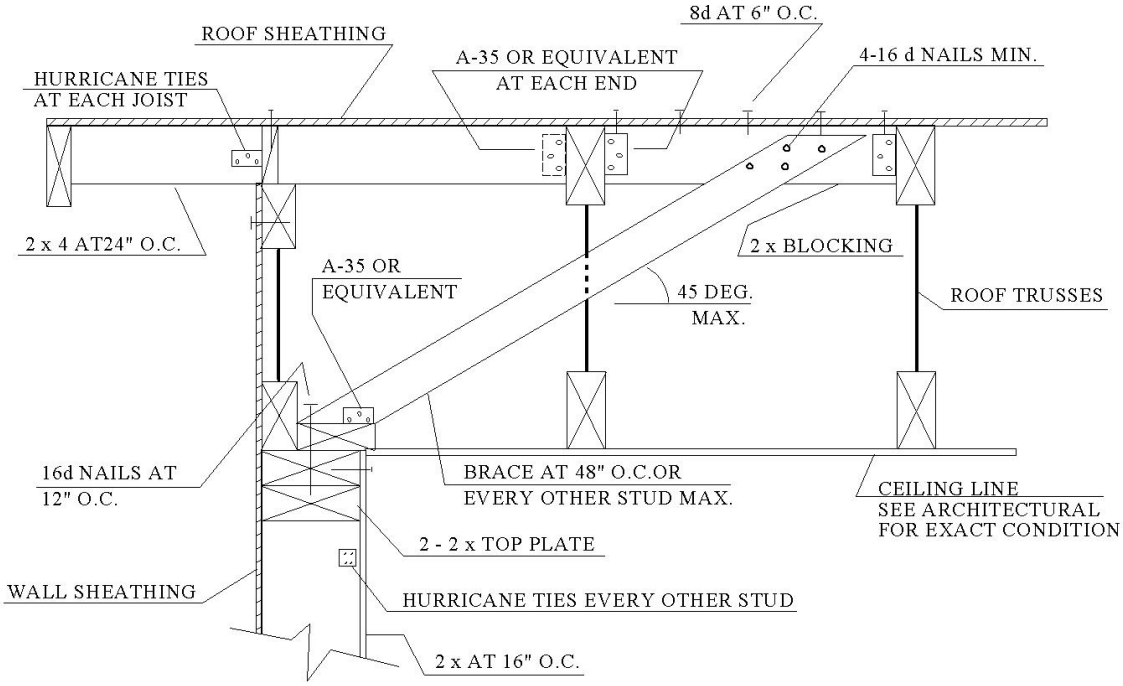

2 GABLE-END BRACE AT ROOF FRAMING

SCHEMATIC, NOT FOR CONSTRUCTION, NOT TO SCALE (P.S.N.)

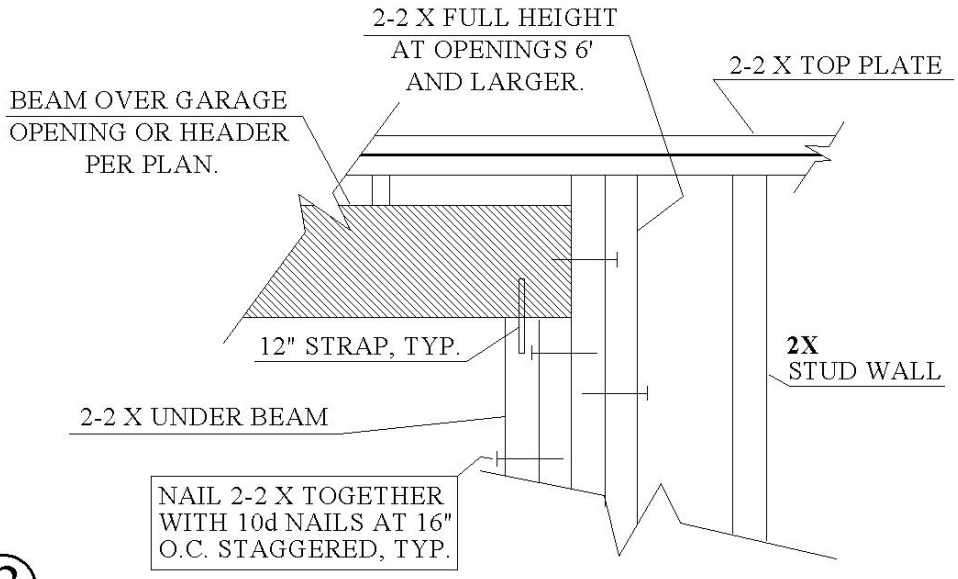

3

TYPICAL JAMB AT GARAGE OPENINGS

SCHEMATIC, NOT FOR CONSTRUCTION, NOT TO SCALE (P.S.N.)

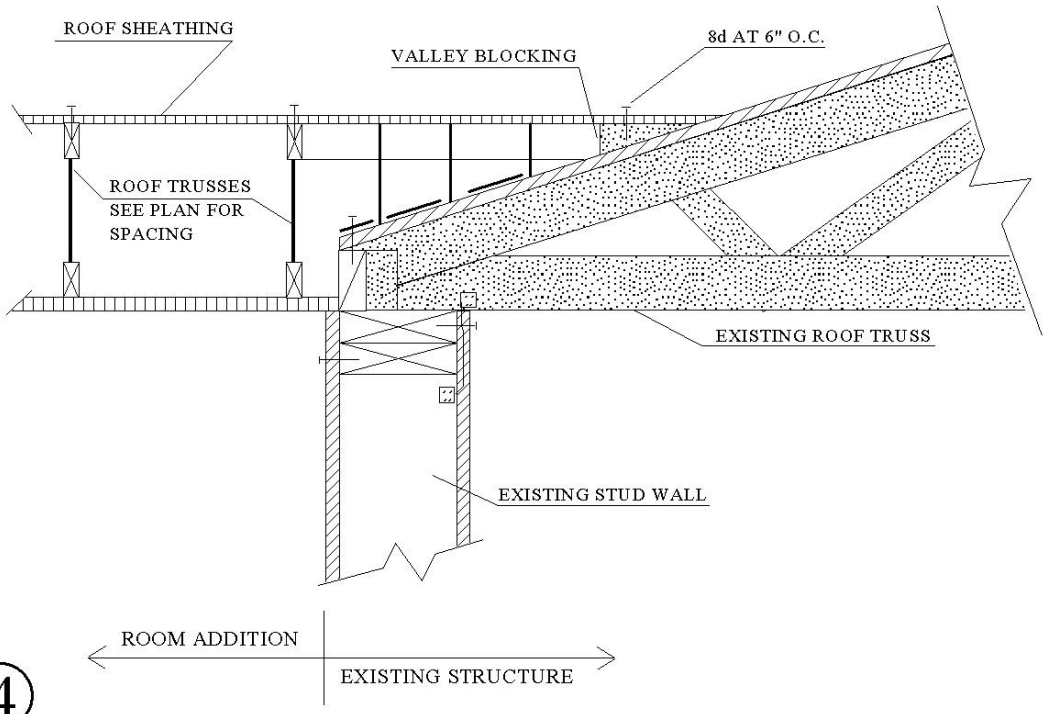

4

NEW ROOF AT EXISTING STRUCTURE

SCHEMATIC, NOT FOR CONSTRUCTION, NOT TO SCALE (P.S.N.)

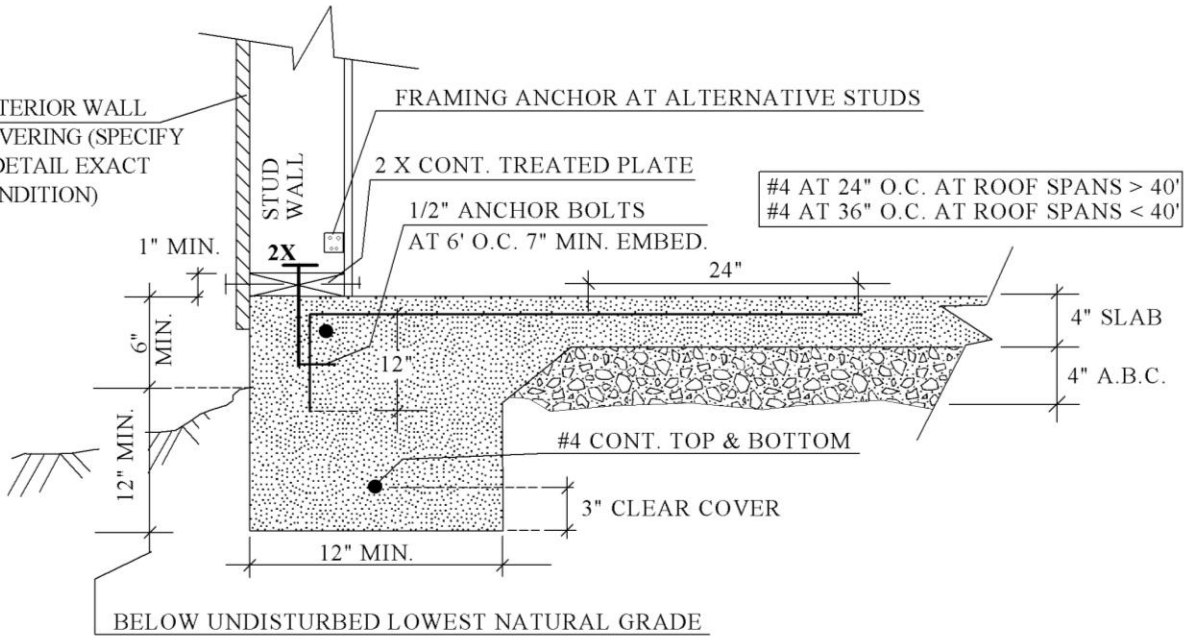

A

MONOLITHIC FOOTING AT STUD WALL

SCHEMATIC, NOT FOR CONSTRUCTION, NOT TO SCALE (P.S.N.)

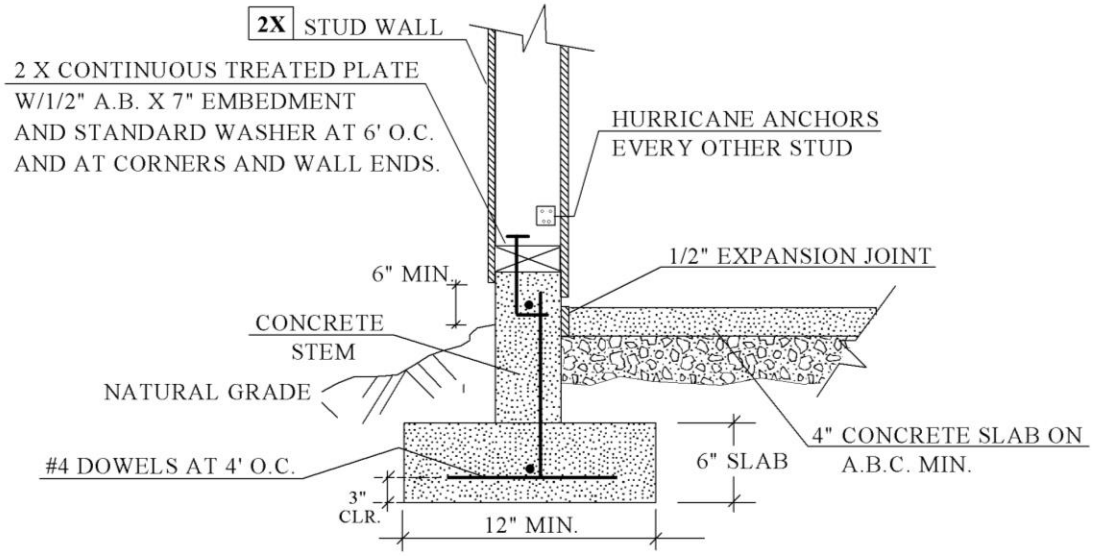

A ALT.

TYPICAL FOOTING AT STUD WALL

SCHEMATIC, NOT FOR CONSTRUCTION, NOT TO SCALE (P.S.N.)

Open-Air Ramadas or Gazebos

An open-air ramada or gazebo is a structure open on the sides and supporting a roof or lattice-type cover. Its primary purpose is to provide shade in conjunction with a recreational activity such as a swimming pool, spa, or sitting area. It is not to exceed both 10 feet to midpoint of roof structure and 150 square feet in area, and must be separated from the residential dwelling by a distance equal to at least ½ of the rear yard setback.

Any proposed ramada or gazebo that exceeds these specifications will be reviewed as an accessory building and is required to meet all property setbacks as indicated in the previous section of this manual.

An open-air ramada or gazebo only requires a 5-foot side yard and 5-foot rear yard setback, as measured from the edge of the roof or cover. In the event that an alley, or common public or private open space other than a street, adjoins the rear yard along one or more of the property lines, the required 5-foot setback from that property line to the ramada may be eliminated.

Multiple ramadas are allowed on the property as long as they do not exceed 150 square feet each, the eaves separated by 1’-0” and meet the setback to dwelling requirement above.

Arizona Rooms

Arizona rooms are defined here as covered patios/porches that are to be enclosed with insect screening or a combination of insect screening and a "knee wall" so that at least 65% of the longer wall and one additional wall, below a minimum of 6 feet 8 inches measured from the floor, is of screen material. These Arizona rooms shall be used only for recreational, outdoor living purposes and not as storage or habitable rooms. The covered roof portion of this structure, whether previously constructed, or constructed in the course of building the Arizona room, shall be designed for a live load of 20 psf. Exterior openings required for light and ventilation shall be permitted to open into the Arizona room.

The City of Chandler does not permit an Arizona room enclosed with windows or a combination of walls and windows as non-habitable space. If you would like to enclose your patio, see the information for additions. An enclosed patio is considered habitable space and shall comply with all code requirements for habitable space.

Remodeling

A permit is needed for remodeling work not listed as exempt on page 5 of this manual. Remodeling projects typically need to comply with the same requirements listed for room additions. See page 32 of this manual.

Roofing

You need to get a permit to re-roof your house when you are:

- Replacing the old roofing material with a different material such as concrete tile. An engineering analysis is required to determine if the existing roof assembly will withstand the additional loads.
- Replacing the old roofing with like material that already exceeds two layers.

Stucco

You need to get a permit to stucco your house or accessory building:

- "One-coat" Stucco systems require a permit and inspection under all circumstances. The building inspector will need to see that the installation contractor is a licensed applicator. Provide an ICC-ES report for the one-coat stucco when applying for a permit. See http://www.icc-es.org/.
- Other stucco systems, such as a three coat system, require a permit so that the inspectors can ensure that the lath ("chicken wire") and other components are properly installed.
- The only time a permit is not required for a stucco system is if the stucco is being directly applied (no lath) to CMU walls.

Fireplaces

Chapter 29-2.9 of the Chandler City Code amends the 2012 International Building Code by adding a new Section 117 – Fireplaces. Notwithstanding any code provision to the contrary, it shall be unlawful for anyone to construct, install, convert or alter any fireplace, stove or any other recreational or aesthetic solid fuel burning devise unless such device and its installation is certified by a nationally recognized testing agency as satisfying the requirements of 40 Code of Federal Regulations, Part 60, Subpart AAA as in effect on July 1, 1990.

Definitions

Effective date means December 31, 1998.

Fireplace means a built-in-place masonry hearth and fire chamber or a factory-built appliance, designed to burn solid fuel or to accommodate a gas or electric log insert or similar device, and which is intended for occasional recreational or aesthetic use, not for cooking, heating or industrial processes.

Solid fuel includes, but is not limited to, wood, coal or other nongaseous or non-liquid fuels, including those fuels defined by the Maricopa County Air Pollution Control Officer as “inappropriate fuel” to burn in residential wood burning devices.

Woodstove means a solid fuel burning heating appliance including a pellet stove, which is either freestanding or designed to be inserted into a fireplace.

Installation Restrictions

All fireplaces or woodstoves constructed on or after 12-31-98 must be one of the following:

1. A fireplace that has a permanently installed gas or electric log insert.
2. A fireplace, woodstove or other solid-fuel burning appliance which has been certified by the Unites States Environmental Protection Agency as conforming to 40 Code of Federal Regulations Part 60, Subpart AAA as in effect on July 1, 1990.
3. A fireplace, woodstove or other solid-fuel burning appliance which has been tested and listed by a nationally recognized testing agency to meet performance standards equivalent to those adopted by 40 Code of Federal Regulations Part 60, Subpart AAA as in effect on July 1, 1990.
4. A fireplace, woodstove or other solid-fuel burning appliance that has been determined by the Maricopa County Air Pollution Control Officer to meet performance standards equivalent to those adopted by 40 Code of Federal Regulations Part 60, Subpart AAA as in effect on July 1, 1990.

5. A fireplace that has a permanently installed woodstove insert, which complies with subsection 2, 3 or 4 above.

In addition to the provisions and restrictions of this section, the construction, installation or alteration of all fireplaces, woodstoves and other gas, electric or solid-fuel burning appliances and equipment shall be done in compliance with the provisions of the construction code and shall be subject to the permits and inspections required by the construction code.

Alterations

On or after the effective date, it shall be unlawful to:

- Alter or remove a gas or electric log insert or a woodstove insert from a fireplace for the purpose of converting the fireplace to directly burn wood or other solid fuel.
- Alter a fireplace, woodstove or other solid fuel-burning appliance in any manner that would void its certification or operational compliance with provisions of this article.

Exemptions

The following installations are not regulated by this section and are not prohibited by this section:

- Furnaces, boilers, incinerators, kilns and other similar space heating or industrial process equipment.
- Cook-stoves, barbeque grills and similar appliance designed primarily for cooking.
- Fire pits, barbeque grills and other outdoor fireplaces.

Room Additions

A room addition is defined as any space added on to an existing dwelling, including the enclosure of an existing covered area, such as a patio cover.

To obtain a building permit, please submit:

- Completed application.
- Two copies of the plot plan showing the house on the lot and the proposed room addition with distances to property lines.
- Foundation plans, wall details and exterior elevations.
- Existing and proposed dimensioned floor plan showing windows and sizes, location of plumbing fixtures, electrical outlets, heating, lighting and smoke alarms.

The addition must be architecturally integrated with the existing residence. It should not detract from the surrounding residences.

The drawings need to clearly indicate what the wall and roof covering is on the existing residence as well as the proposed addition. You must provide elevation drawings showing both the existing residence as well as the proposed addition.

Show the footing size on your wall section. Continuous footings are a minimum of 12 inches wide and a minimum of 12 inches below grade. The sill plate shall be a minimum of 6 inches above grade.

Typically, any room (other than a bathroom or kitchen) that has a closet shall be considered a sleeping room and will need to meet all sleeping room requirements.

Sleeping rooms, as well as the area outside of sleeping rooms, are required to have smoke alarms. When interior alterations, repairs or additions requiring a permit are made, or when one or more sleeping rooms are added or created in existing dwellings, the individual dwelling unit shall be provided with smoke alarms located as required for new dwellings. Smoke alarms and Carbon monoxide detectors are required when performing Interior work that requires a permit, except work such as plumbing or mechanical (air conditioning). If they are not pre-existing throughout the whole house they must be added. Dual (CO & Smoke) alarms are available. They may be required to be interconnected if access is available. Ask your inspector. R314, 315, IEBC Ch 5-9.

Any main door to the outside must have a concrete landing. The width of each landing shall not be less than the door served. Every landing shall have a minimum dimension of 36 inches measured in the direction of travel. Reference R311.3.

A switched exterior light is required at the exterior side of each outdoor egress. Reference E3903.3.

Any non-bearing wall to be added does not need its own footing, but it shall have a bottom plate of treated wood or wood of natural resistance to decay. This bottom plate must be fastened to the slab in an approved manner and must be a minimum of 6 inches above the adjoining surface. Reference R404.1.6.

Any bearing wall shall have its own footing, a bottom plate of treated wood or wood of natural resistance to decay, must be secured in an approved manner and must be a minimum of 6 inches above the adjoining surface.

If you plan to use engineered roof trusses on your project, you must submit sealed engineered roof truss calculations or the roof truss design review waiver with your permit application. The waiver requires the seal of a State of Arizona registered architect or engineer. Open-web floor truss and manufactured I-joist floor assemblies over 80 square feet require a ½" minimum gypsum board membrane for fire protection. Reference R501.3.

Provide a complete floor plan of the room adjacent to the proposed room addition. Indicate the size of the existing room, the size and location of all exterior doors and windows. All habitable rooms shall be provided with a daylight area of not less than 8% of the floor area of such rooms. Natural ventilation shall be through windows, doors, louvers or other approved openings to the outdoor air. The openings shall be provided with ready access or shall otherwise be readily controllable by the building occupants. The minimum area open to the outdoors shall be 4% of the floor area being ventilated. If you propose to remove or cover existing windows, this information must be included in your drawings.

Provide every dwelling unit with heating facilities capable of maintaining a minimum room temperature of 68°F at a point 3 feet above the floor and 2 feet from exterior walls in all habitable rooms. Portable space heaters shall not be used to achieve compliance with this requirement. Indicate how the required heating will be provided.

At least one wall switch controlled lighting outlet shall be installed in every habitable room and bathroom.

Install receptacle outlets so that no point along the floor line in any wall space is more than 6 feet (measured horizontally) from an outlet in that space.

All branch circuits that supply 125-volt, single-phase, 15- and 20-ampere outlets installed in ***all habitable rooms*** shall be protected by an arc-fault circuit interrupter listed to provide protection of the entire branch circuit. Also, all new 15 and 20V receptacles shall be tamper-proof except receptacles located more than 5.5 feet above the floor, receptacles that are part of a luminaire or appliance, or receptacles dedicated to refrigerators or freezers (appliances not easily moved) Reference E4002.14.

A receptacle outlet shall be installed at each kitchen wall counter space 12 inches or wider. Receptacle outlets shall be installed so that no point along the wall line is more than 24 inches measured horizontally from a receptacle outlet in that space. Exception: Receptacle outlets shall not be required on a wall directly behind a range or sink. At

least one receptacle outlet shall be installed at islands and peninsulas with a long dimension of 24” or greater and a short dimension of 12” or greater. All 125 volt 15 and 20 amp receptacle outlets serving kitchen countertop spaces shall have GFCI protection. Ground-fault circuit interrupters shall be installed in a readily accessible location Reference E3902.11. For example, not at dedicated outlet locations such as refrigerators.

All 125-volt, single phase, 15- and 20-ampere receptacles installed outdoors shall have ground-fault circuit-interrupter protection (GFCI) for personnel.

At least one wall receptacle outlet shall be installed in bathrooms. It must be located within 36 inches of the outside edge of each lavatory basin. The receptacle outlet shall be located on a wall that is adjacent to the lavatory basin location. All 125-volt, single-phase, 15- and 20-ampere receptacles installed in bathrooms shall have ground-fault circuit-interrupter protection (GFCI) for personnel.

Provide a panel schedule showing the existing and new breakers if you propose adding a sub-panel. Load calculations may also be required. (See Appendix B at the back of this booklet for a calculation form that you can use to simplify the process.)

Every sleeping room shall have at least one operable emergency escape and rescue opening.

- If the opening is a window, it shall have a sill height of not more than 44 inches above the floor.
- All emergency escape and rescue openings shall have a minimum net clear opening of 5.7 square feet (5 square feet at grade level).
- Grade floor openings shall have a minimum net clear opening of 5 square feet.
- The minimum net clear opening height shall be 24 inches.
- The minimum net clear opening width shall be 20 inches.
- Emergency escape and rescue openings shall be operational from the inside of the room without the use of keys or tools.

Enclosed attics and enclosed rafter spaces formed where ceilings are applied directly to the underside of the roof rafter shall have cross ventilation for each separate space by ventilating openings protected against the entrance of rain or snow. Ventilating openings shall be provided with corrosion-resistant wire mesh, with ⅛-inch minimum to ¼-inch maximum openings.

The total net free ventilating area shall be not less than to 1 to 150 of the area of the space ventilated, except that the total area is permitted to be reduced to 1 to 300, if at least 40 percent and not more than 50 percent of the required ventilating area is provided by ventilators located in the upper portion of the attic or rafter space. Upper

ventilators shall be located no more than 3 feet below the ridge or highest point of the space, measured vertically, with the balance of the required ventilation provided by eave or cornice vents. Where the location of wall or roof framing members conflicts with the installation of upper ventilators, installation more than 3 feet below the ridge or highest point of the space shall be permitted.

You must include roof vent calculations in your drawings.

Please provide a water meter work sheet if you are adding plumbing fixtures (see Appendix A for an example). This information must be on the plans, not a separate sheet.

Any addition of conditioned space shall meet the minimum energy efficiency requirements of Chapter 11 of the 2012 International Residential Code. (Compliance with Chapter 4 of the 2012 International Energy Conservation Code is also acceptable.) Following are the minimum requirements from Table N1102.1 of the 2012 International Residential Code:

• Windows/Skylights	U-Factor	.40/.65
• Windows/Skylight	Solar Heat Gain Coefficient	.25/.25
• Ceiling	R-Value	38
• Wood Frame Wall	R-Value	13
• Mass Wall	R-Value	4/6*
• Floor **	R-Value	13

*The R-6 value is for when over ½ of the walls insulative value is provided on the interior of the building.
**This is not a slab on grade, this would be the value for a typical framed floor.

For existing buildings, the thermal envelope shall be durably sealed to limit infiltration. The following shall be caulked, gasketed, weather-stripped, or otherwise sealed, N1102.4. For new construction, testing is required per R402.4.1.2.

- All joints, seams and penetrations.
- Site-built windows, doors and skylights.
- Openings between window and door assemblies and their respective jambs and framing.
- Utility penetrations.
- Dropped ceilings or chases adjacent to the thermal envelope.
- Knee walls.

- Walls and ceilings separating the garage from conditioned spaces.
- Behind tubs and showers on exterior walls.
- Common walls between dwelling units.
- Other sources of infiltration.
- Tile backer (dens-shield) at showers. No green board allowed.

As of 2/25/2013, supply ducts may be insulated to a minimum of R-6 when one or more of the following conditions are met, as an alternate design method. Reference 2012 IECC, section 102. 1.) Minimum SEER rating of space heating/cooling system is increased to 15. 2.) Maximum U-factor is decreased to .35 and maximum SHGC is decreased to 0.22 for all fenestration. 3.) Wall cavity insulation minimum R-value is increased to R-19. 4.) Single family residences constructed to an above code program as described in the IECC section 102.1.1 or N11101.8 are Exempt.

Otherwise, supply and return ducts shall be insulated to a minimum of R-8. Mechanical system piping capable of carrying fluids and circulating hot water systems shall be insulated to a minimum of R-2. A permanent certificate shall be posted on or in the electrical distribution panel. The certificate shall be completed by the builder or registered design professional. The certificate shall list the predominant R-values of insulation installed in or on ceiling/roof, walls, foundation and ducts outside conditioned spaces; U-factors for fenestration; and the solar heat gain coefficient (SHGC) of fenestration (windows/glass doors/skylights). Where there is more than one value for each component, the certificate shall list the value covering the largest area. The certificate shall list the type and efficiency of heating, cooling and service water heating equipment. (The blank certificate is provided with your building permit.)

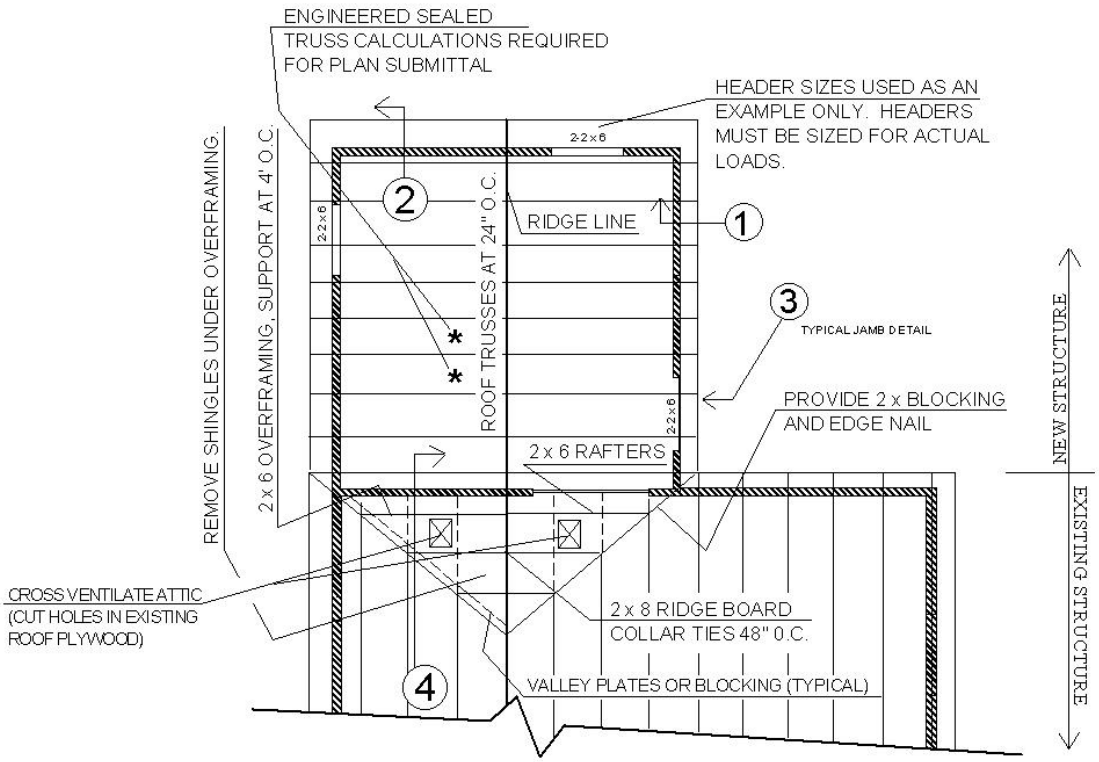

ROOF FRAMING AT ADDITION TO EXISTING BUILDING

SCHEMATIC, NOT FOR CONSTRUCTION, NOT TO SCALE

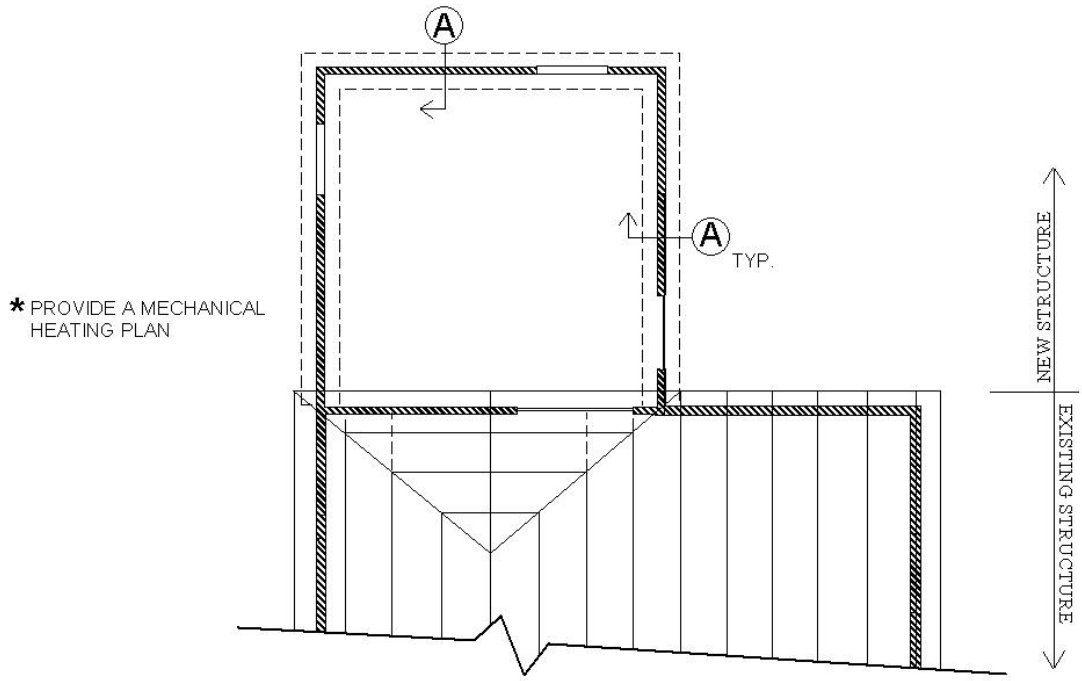

FOUNDATION PLAN FOR ROOM ADDITION

SCHEMATIC, NOT FOR CONSTRUCTION, NOT TO SCALE

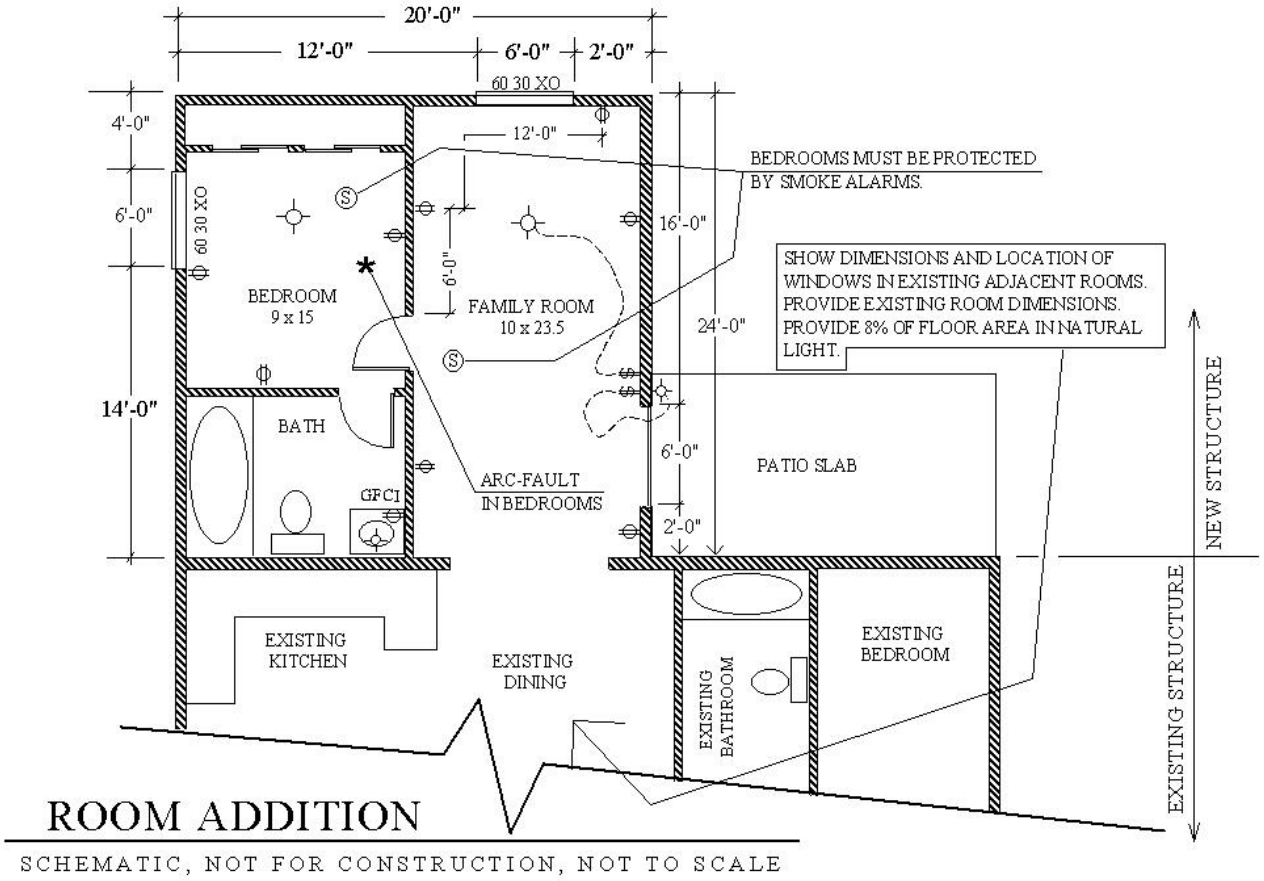
20'-0"
12'-0"
6'-0"
2'-0"
60 30 XO
4'-0"
6'-0"
14'-0"
12'-0"
BEDROOMS MUST BE PROTECTED BY SMOKE ALARMS.
16'-0"
24'-0"
SHOW DIMENSIONS AND LOCATION OF WINDOWS IN EXISTING ADJACENT ROOMS. PROVIDE EXISTING ROOM DIMENSIONS. PROVIDE 8% OF FLOOR AREA IN NATURAL LIGHT.
BEDROOM
9 x 15
FAMILY ROOM
10 x 23.5
BATH
GFCI
ARC-FAULT IN BEDROOMS
PATIO SLAB
2'-0"
NEW STRUCTURE
EXISTING STRUCTURE
EXISTING KITCHEN
EXISTING DINING
EXISTING BATHROOM
EXISTING BEDROOM
ROOM ADDITION
SCHEMATIC, NOT FOR CONSTRUCTION, NOT TO SCALE

Storage Sheds

A storage shed is defined as a subordinate structure or building used primarily for storage purposes, of a height not greater than 7 feet, and total square footage under the roof not to exceed 120 square feet, with no utilities (water, sewer, electrical or gas).

As defined, this structure does not require a building permit. If the storage shed exceeds the parameters defined above, it becomes an accessory building and must meet the requirements for that type of structure.

Storage sheds are limited to one per lot and they must be located in the side or rear yard of the property.

They are not subject to side and rear yard setback requirements, and must not be placed in an easement.

Storage shed roofs shall not drain onto adjoining properties.

Setbacks

If in doubt, check for permitting requirements and setback requirements at (480) 782-3000.

Swimming Pools and Spas

Definition: Per the City municipal code, a swimming pool is any body of water with a depth greater than 18 inches. COC Municode Ch 35 Article II.

All pools and spas require a permit, whether constructed above or below ground (other than those referenced in item 9 on page 5 of this manual).

Pool engineering plans, stamped and sealed by an engineer, are required on all custom in ground pools and spas. Plans are required on all pre-manufactured above ground pools and spas.

Swimming pools shall not occupy any front yard nor shall the water's edge be located closer than 5 feet to any side or rear property line.

The water's edge must be a minimum of 5 feet from the fence for all pools constructed on a lot with an offset property line and/or an offset fence.

A pool or cool decking cannot be constructed across a property line.

An engineered surcharge design is required for in-ground pools built closer than 5 feet to a building foundation.

Pool equipment must be 5 feet from the water's edge.

Prior to construction, all easements must be cleared by the utility companies.

Any glazing within 5 feet of the water's edge where the bottom edge is less than 60 inches above grade must be safety glazed. Tinting film may not be used to satisfy this requirement.

Fences

Chandler City Code requires a 6-foot minimum to a 7-foot maximum perimeter fence around the property, as measured on the outside of the property (refer to Chapter 35, Section 2205). This fence may be a solid masonry or wrought iron fence. Refer to the section on fences and walls page 9 of this manual for the requirements for fences over 6 feet in height.

Pool Barriers

Chapter 31 of the 2012 International Building Code and A.R.S. 36-1681 requires a pool barrier:

- For residential pools, a 5-foot minimum wrought iron or block and wrought iron combination measured on the side of the barrier that faces away from the swimming pool (refer to Graphic A on page 45).

- Self-closing, self-latching devices on doors that open into the pool area (refer to the door and window information in the “Pool Barrier Guidelines” section).
- Window devices (refer to the door and window information in the “Pool Barrier Guidelines” section).
- Audible alarms on doors and screens (refer to the alarm information in the “Pool Barrier Guidelines” section).
- Approved lockable or latchable hard cover for spas that comply with ASTM F 1346.
- Approved key-operated, motorized safety cover that complies with ASTM F 1346.

Gates

If no interior fence is present, the gate on the perimeter fence must swing outward from the pool and be self-closing and self-latching.

If a separate interior fence is present, the perimeter gate may swing in either direction, be self-closing or self-latching, but if a fence is in place, the gate is not required to be self-closing and self-latching. Refer to Zoning Code Chapter 35 Section 2205 (4).

All gate leafs 4 feet or less are to be considered as pedestrian gates and must be self-closing and self-latching, with a latch height at 54 inches above grade. An RV gate that is the only way to get from the front of the house to the back of the house, without going through the house (i.e. it may also be used as a pedestrian gate), requires one of the leafs to be self-closing and self-latching regardless of how wide it is if there is not a separate interior fence.

All gate leafs over 4 feet must be secured with a locking device and be kept locked.

A spring-loaded hinge may be used to make a gate self-closing. This is a stretch spring mounted horizontally from the gate to a post or pilaster or a torque spring mounted in an almost vertical position from the gate to a post or pilaster. The torque spring is to be mounted on the face of the gate that will allow the torque spring to unwind and PUSH the gate to the latched position (see Graphic B at the end of this section for torque spring installation).

Inspections

No one needs to be home for the first inspection, which is the pre-gunite inspection. PLANS AND PERMIT MUST BE AVAILABLE.

The homeowner must be present for the second inspection (pre-plaster inspection) if the house forms part of the interior barrier around the pool or there is no interior pool fence. However, if an interior fence encompasses the entire pool, then the homeowner does not need to be present for the second inspection.

All electrical service panels must be left unlocked for the inspector.

Inspections that require entry into the home will not be conducted if only minor children are at home.

Pool Barrier Guidelines

Please note: the pool barrier requirements must be met whether or not children of any age are living at the dwelling.

Barrier

Pool barriers shall be an interior fence, perimeter wall, building wall or a combination thereof, which completely surrounds the swimming pool. The top of the barrier, including all gates and doors therein, shall not be less than 5 feet above finished floor or finished grade measured on the exterior side of the enclosure.

There shall be no horizontal or vertical openings, holes, or gaps in the interior barrier large enough for a sphere 4 inches in diameter to pass through. The maximum vertical clearance between grade and the bottom of the barrier shall be 2 inches measured on the side of the barrier that faces away from the pool.

A barrier fence or wall shall have no handholds, footholds or horizontal members accessible from the exterior side of the enclosure. Horizontal members of fences shall be spaced not less than 45 inches apart measured vertically, or shall be placed on the pool side of a fence which has no opening greater than 1¾ inches measured horizontally. Wire mesh or chain link fences shall have a maximum mesh size of 2 ¼ inches square.

In addition, the exterior fence enclosure for swimming pools (as required by Chapter 35-2205 of the City Code) need not necessarily be located on the side or rear property lines.

Gates and Doors

All pedestrian access gates in a pool barrier shall be self-closing and self-latching and must open outward from the pool. Gate latches shall be located not less than 54 inches above finished grade or shall otherwise be made inaccessible from the outside by small children. (See Graphic B on page 46 at end of this section).

All exterior hinged or sliding doors leading from a dwelling unit, bedroom, garage or storage room directly into a swimming pool enclosure shall be self-closing or shall be equipped with audible alarms. Hinged doors shall open away from the pool area.

Self-closing devices shall consist of one of the following:

- Spring loaded hinges.
- Pneumatic closures (without stops).
- Approved sliding glass door closures.

Latching mechanisms shall consist of one of the following:

- Passage lock located 54 inches above the finished floor.
- Double cylinder gate latch installed at any height, provided the door is not required for emergency egress.
- Sliding glass door latches shall be located 54 inches above the finished floor.

Alarms shall produce an audible warning when the door and/or its screen, if present, are opened. The alarm shall be listed in accordance with UL 2017. The alarm deactivation has to be 54" above finish floor.

If a pet door is large enough that a sphere 4 inches in diameter will pass through, and is located in any wall of the dwelling that forms a part of the interior barrier, it must be rendered unusable with screws or nails so the slide portion of the pet door cannot be removed.

Windows

All windows facing on a swimming pool enclosure shall be equipped with a latching device.

For emergency escape or rescue windows, the latching device shall be located not less than 54 inches above the finished floor.

For all other operable dwelling unit or garage windows, the latching device shall consist of one of the following:

- A keyed lock that prevents opening the window more than 4 inches.
- A screwed-in-place wire mesh screen.
- A latching device located not less than 54 inches above the finished floor.

Above Ground Swimming Pools

All above ground pools, with non-climbable sides not less than 48 inches high above the finished grade, may be located on a single-family residential property without requiring an interior fence, wall or barrier between the pool and the dwelling. Where an aboveground pool structure is used as a barrier or where the barrier is mounted on top of the pool structure, and the means of access is a ladder or steps, then the ladder or steps either shall be capable of being secured, locked or removed to prevent access, or

the ladder or steps shall be surrounded by a barrier that meets the requirements of an in ground pool. When the ladder or steps are secured, locked or removed, any opening created shall not allow the passage of a 4-inch-diameter sphere.

Entrapment Avoidance

Suction outlets shall be designed to produce circulation throughout the pool or spa. Single outlet systems, such as automatic vacuum cleaner systems, or other such multiple suction outlets whether isolated by valves or otherwise shall be protected against user entrapment.

Graphic A

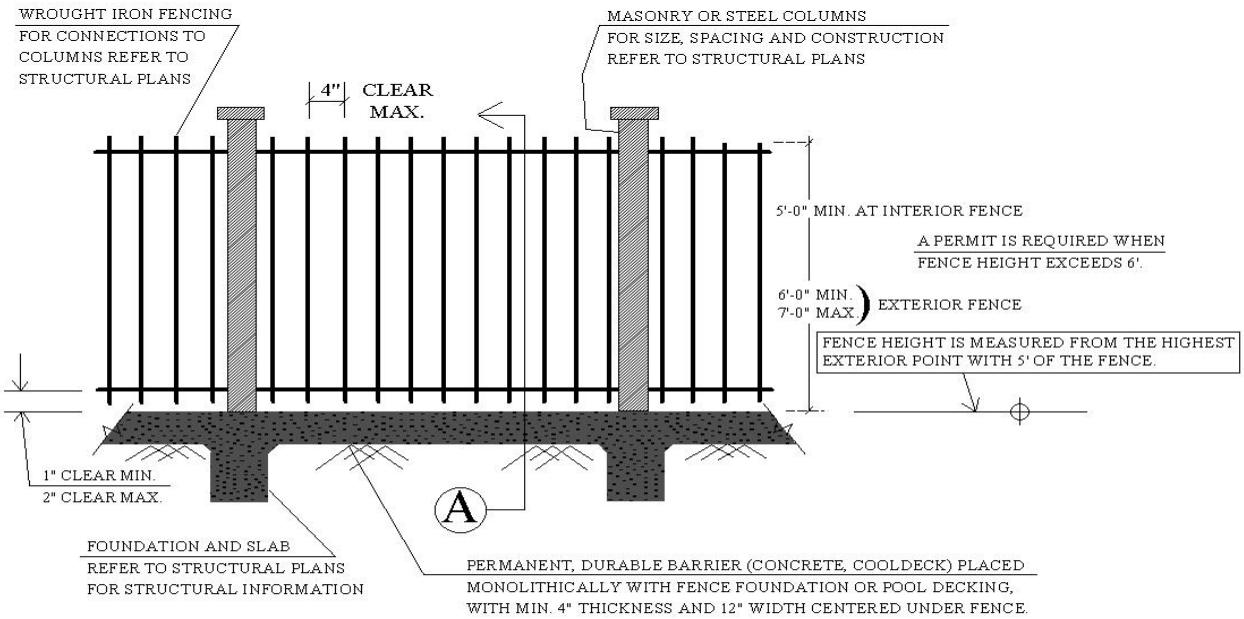
WROUGHT IRON FENCING
FOR CONNECTIONS TO
COLUMNS REFER TO
STRUCTURAL PLANS
MASONRY OR STEEL COLUMNS
FOR SIZE, SPACING AND CONSTRUCTION
REFER TO STRUCTURAL PLANS
4"
CLEAR
MAX.
5'-0" MIN. AT INTERIOR FENCE
A PERMIT IS REQUIRED WHEN
FENCE HEIGHT EXCEEDS 6'.
6'-0" MIN.
7'-0" MAX.
EXTERIOR FENCE
FENCE HEIGHT IS MEASURED FROM THE HIGHEST
EXTERIOR POINT WITH 5' OF THE FENCE.
1" CLEAR MIN.
2" CLEAR MAX.
A
FOUNDATION AND SLAB
REFER TO STRUCTURAL PLANS
FOR STRUCTURAL INFORMATION
PERMANENT, DURABLE BARRIER (CONCRETE, COOLDECK) PLACED
MONOLITHICALLY WITH FENCE FOUNDATION OR POOL DECKING,
WITH MIN. 4" THICKNESS AND 12" WIDTH CENTERED UNDER FENCE.

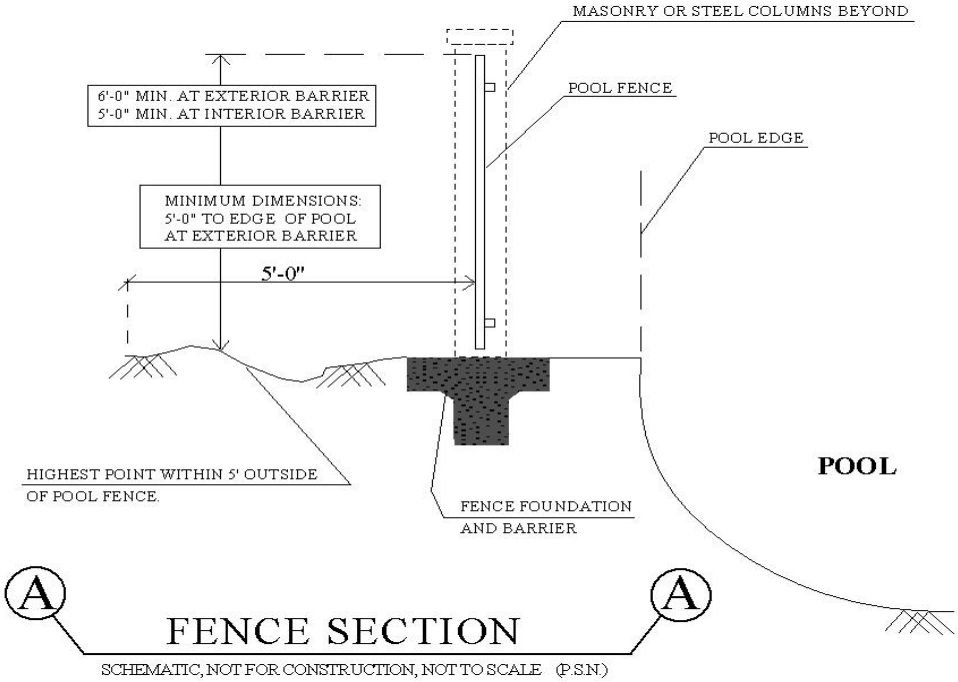
MASONRY OR STEEL COLUMNS BEYOND
POOL FENCE
POOL EDGE
6'-0" MIN. AT EXTERIOR BARRIER
5'-0" MIN. AT INTERIOR BARRIER
MINIMUM DIMENSIONS:
5'-0" TO EDGE OF POOL
AT EXTERIOR BARRIER
5'-0"
HIGHEST POINT WITHIN 5' OUTSIDE
OF POOL FENCE.
FENCE FOUNDATION
AND BARRIER
POOL
A
A
FENCE SECTION
SCHEMATIC, NOT FOR CONSTRUCTION, NOT TO SCALE (P.S.N.)

Graphic B

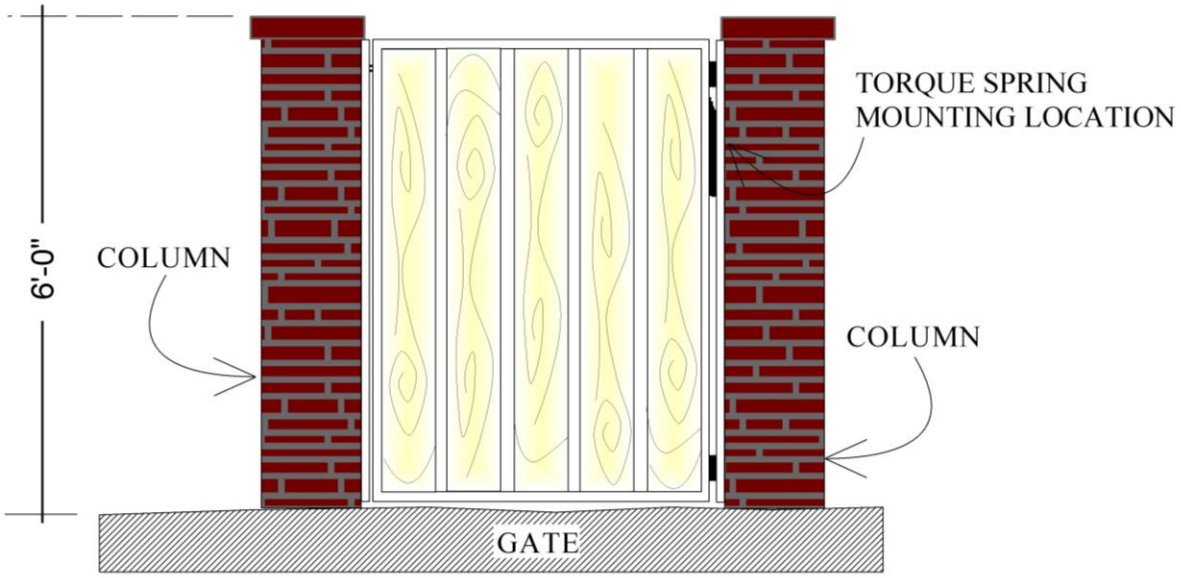
TORQUE SPRING
MOUNTING LOCATION
6'-0"
COLUMN
COLUMN
GATE

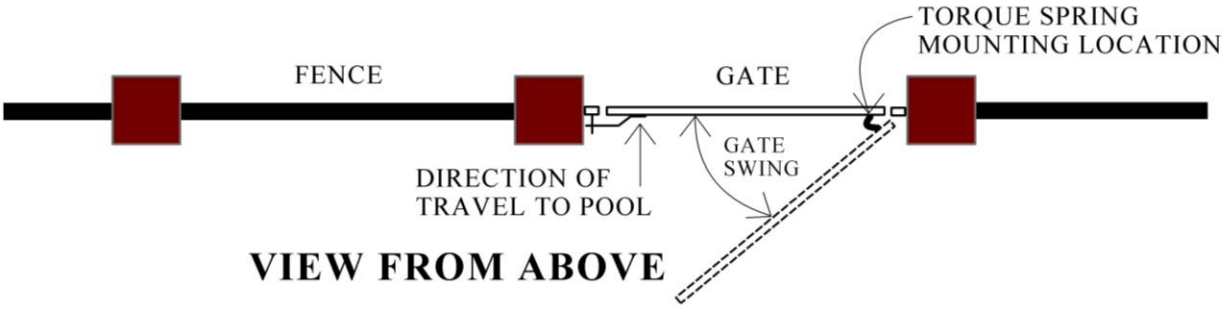
TORQUE SPRING
MOUNTING LOCATION
FENCE
GATE
GATE
SWING
DIRECTION OF
TRAVEL TO POOL
VIEW FROM ABOVE

Required Inspections

This section lists the minimum inspections required by the City of Chandler.

To schedule an inspection, call (480) 782-3100, or go to our inspection scheduling website at www.chandleraz.gov/clics 24 hours in advance of when the inspection is needed. An inspector will visit the property and leave written approval or a correction notice. The building inspector must approve all work before construction can proceed to the next level. All work to be inspected must be accessible and exposed.

Type of Inspection	Request Inspection When:
1. Footings	All forms, reinforcing steel and UFER ground are in place. An additional inspection is required for stems poured separately.
2. Monolithic footing	Reinforcing steel, UFER, forms and accessories are in place, but not covered.
3. Stem wall	Forms are aligned and staked, grade pins installed and reinforcing steel is in place.
4. Plumbing (groundwork)	The under-floor building drain is installed, shaded and under pressure test, but not covered.
5. Water piping (groundwork)	All under-floor water piping is installed, but not covered.
6. Building sewers (the sewer piping connecting the building with the private sewer or the public sewer)	Pipes are installed, shaded and properly supported, but not covered.
7. Water service (the water yard piping from the City water meter to the building)	Pipes are installed and under pressure, but not covered.
8. Upper level drainage	Tubs are filled to flood rim.
9. Strap and shear	All shear panels and mechanical fasteners are installed, but not covered.

Type of Inspection	Request Inspection When:
Note: inspections 10 through 13 are done concurrently.	
10. Rough electrical	All rough-in electrical is installed, but not covered
11. Rough plumbing	All rough-in plumbing is installed and under pressure test, but not covered.
12. Rough heating and ventilation	All rough-in mechanical work is installed, but not covered. (Groundwork – request inspection when ductwork is installed, but not covered).
13. Framing	The building is “dried in” and all framing members, gussets, shear panels, anchors and all plumbing, mechanical and electrical rough-ins are in place, but not covered.
Note: Inspections 14 and 15 are done concurrently.	
14. Wallboard	The wallboard is installed and nailed, but not filled or taped.
15. Lath inspection	All substrate wire mesh and trim are installed and ready to receive stucco, but not covered.
16. Electric (groundwork)	The conduit is installed, but not covered.
17. Final Inspection	The building is completed to the requirements of the approved plans, specification and the City of Chandler Codes.

Appendix A
Water Meter Worksheet

Fixture	Number	Value	Total
Water Closet (tank type)		x 2.2	
Shower Stall		x 1.4	
Bathtub (with/without overhead shower head)		x 1.4	
Lavatory		x 0.7	
Kitchen Sink		x 1.4	
Dishwasher		x 1.4	
Hose Bibs (count all)		x 2.5	
Laundry or Utility Sink		x 1.4	
Automatic Clothes Washer		x 1.4	
If you use a full bath group, do not count the individual fixtures.			
Full Bath Group (with/without shower head or shower stall)		x 3.6	
Half Bath Group (water closet and lavatory)		x 2.6	
Kitchen Group (dishwasher and sink with/without garbage grinder)		x 2.5	
Laundry Group (clothes washer standpipe and laundry tub)		x 2.5	
Total Fixture Units			

Total developed length of the water line from the water meter to the furthest water-using fixture unit. (**Note:** this is usually the hose bib at the rear of the home).

Total distance: _____ feet

Indicate the size of the existing water meter and supply size. NOTE: The minimum water meter size for new construction is 1 inch.

Meter size _____

Supply size _____

Note: for a room addition, please include both the existing and new on this sheet.

Appendix B
Electrical Load Calculation Worksheet

OPTIONAL CALCULATION – EXISTING DWELLING UNIT. NEC SECTION 220.83/IRC E3602.2.

For a dwelling unit having the total connected load served by a single 3-wire, 120/240 volt set of service entrance or feeder conductors with an ampacity of 100 or greater.

LIVABLE SQUARE FOOTAGE _____ SF @ 3= _____ VA

SMALL APPLIANCE CIRCUITS (2 minimum) _____@ 1500 = _____

LAUNDRY CIRCUIT (Required in new dwelling: 1500) = _____

ELECTRIC DRYER (Nameplate rating or 5,000) = _____

ELECTRIC RANGE (Nameplate rating or 12,000) = _____

COOKTOP & OVEN (Nameplate rating or 6,000 each) = _____

MICROWAVE OVEN (Dedicated circuit: 1200) = _____

DISHWASHER (W or W/) Disposer on circuit: 1500) = _____

DISPOSER (Separate dedicated circuit: 720)= _____

ELECTRIC WATER HEATER (Nameplate or 4,500) = _____

OTHER _____ _____

SUBTOTAL = _____ VA

FIRST 10 KVA @100% = 10,000

REMAINDER @ 40% = _____

SUBTOTAL = _____ VA

DIVIDED BY 240 V = _____AMPS

AIR CONDITIONING = _____AMPS

POOL PUMP = _____AMPS

TOTAL = _____AMPS

REQUIRED SERVICE _____AMPS

Appendix C

Building Permit Application

Chandler • Arizona Where Values Make The Difference	Building Permit Application	STAMP	City Permit No.

Date	Applicant/Applicant's Representative *(contact for questions, plan pickup, etc.)*	Phone Number
E-Mail Address (Optional)	Trust Account: ☐ Yes ☐ No	Trust Account Number

Permit Type:	Commercial:	Residential:		Other:
	☐ Site Plan ☐ Tenant Improvement	☐ Custom ☐ Remodel	☐ Standard Plan No.: _____ Elevation: _____	☐ Pool/Spa ☐ Gas/Elect ☐ Water Meter

Project Address			City, State, Zip	
Project Name				
Description of work to be performed				
Construction Area S.F.	Pool S.F. *(pool permit)*	Type of Construction *(e.g. I, II, III, IV, V)*	No. of Stories	Occupancy Class
Assessor's Parcel No.	Subdivision/Shopping Center Name			Lot No.

Property Owner Name	Phone Number	Fax Number
Mailing Address	City, State, Zip Code	

Contractor Name (*Please Sign Below*)	City Sales Tax No.	Phone Number	Fax Number
Mailing Address		City, State, Zip Code	

Water Meter is: ☐ New ☐ Inside City Limits ☐ Existing ☐ Outside City Limits	Domestic Meter Size	Landscape Meter Size	Service Line Size
Name		Phone Number	
Billing Address		City, State, Zip Code	
Applicant/Applicant's Representative/Owner's Signature	Date	Total Construction Valuation *(bid price, if applicable)*:	

I am Currently a Licensed Contractor: (*This section must be filled out by contractor or have a qualifying exemption*)

Name: _____ Signature: _____ Date: _____	Falsification of information on this document for the purpose of evading State Licensing laws is a Class II misdemeanor pursuant to A.R.S. State Statutes 13-2704. ***See back of this form for state statue regarding contractor licensure and exemptions.***	ROC License #:_____ License Class: _____ ☐ I am claiming an Exemption (*See back*)

Mailing Address:
P.O. Box 4008, MS 406
Chandler, Arizona 85244-4008

Transportation and Development Department
Development Services Division
215 E. Buffalo St., Chandler Arizona 85225

Telephone: (480) 782-3000
Fax: (480) 782-3055
www.chandleraz.gov
Form No: UDM-075/Building
Rev: 6-17-11

EXEMPTION FROM LICENSING

I am exempt from Arizona contractors' license laws on the basis of the license exemptions contained in Arizona Revised Statutes 32-1121A., as marked below.

A.R.S. State Statute 32-1121; Persons not required to be licensed; Penalties.

☐ 32-1121A.5 Owners of property who improve such property or who build or improve structures or appurtenances on such property and who do the work themselves, with their own employees or with duly licensed contractors, if the structure, group of structures of appurtenances, including the improvements thereto, are intended for occupancy solely by the owner and are not intended for occupancy by members of the public as the owner's employees of business visitors and the structures of appurtenances are not intended for sale or for rent. In all actions brought under this chapter, proof of the sale or rent or the offering for sale or rent of any such structure by the owner-builder within one year after completion or issuance of a certificate of occupancy is prima facie evidence that such project was undertaken for the purpose of sale or rent. For the purposes of this paragraph, "sale" or 'rent' includes any arrangement by which the owner receives compensation in money, provisions, chattels or labor from the occupancy of the transfer or the property or the structures on the property.

☐ 32-1121A.6 Owners of the property who are acting as developers and who build structures of appurtenances to structure on their property for the purpose of sale or rent and who contract for such a project with a general contractor licensed pursuant to this chapter and owners of property who are acting as developers, who improve structures or appurtenances to structures on their property for the purpose of sale or rent and who contract for such a project with a general contractor or specialty contractors licensed pursuant to this chapter. To qualify for the exemption under this paragraph, the licensed contractors' names and license numbers shall be included in all sales documents.

☐ 32-1121A.14 Any person other that a licensed contractor engaging in any work or operation on one undertaking or project by one or more contracts, for which the aggregate contract price, including labor, materials and all other items, but excluding any electrical fixture or appliance that was designed by the manufacturer, that is unaltered, unchanged or unmodified by any person, that can be plugged into a common household electrical outlet utilizing a two pronged or three pronged electrical connector and that does not use any other form of energy, including natural gas, propane or other petroleum or gaseous fuel, to operate or is attached by a nail, screw or other fastening device to the frame or foundation of any residential structure, is less than one thousand dollars. The work or operations which are exempt under this paragraph shall be of a casual or minor nature.

This exemption does not apply:

(a) In any case in which the performance of the work requires a local building permit.
(b) In any case in which the work or construction is only a part of a larger or major operation, whether undertaken by the same or a different contractor, or in which a division of the operation is made in contracts of amounts less than one thousand dollars, excluding any electrical fixture or appliance that was designed by the manufacturer, that is unaltered, unchanged or unmodified by any person, that can be plugged into a common household electrical outlet utilizing a two pronged or three pronged electrical connector and that does not use any other form of energy, including natural gas, propane or other petroleum or gaseous fuel, to operate or is attached by a nail, screw or other fastening device to the frame or foundation of any residential structure, for the purpose of evasion of this chapter or otherwise.
(c) To a person who utilizes any form of advertising to the public in which the person's unlicensed status is not disclosed by including the words "not a licensed contractor" in the advertisement.

will be using the following licensed contractors on this project:

General Contractor _____ License No. ROC _____ Class _____

Mechanical Contractor _____ License No. ROC _____ Class _____

Electrical Contractor _____ License No. ROC _____ Class _____

Plumbing Contractor _____ License No. ROC _____ Class _____

Other Contractor _____ License No. ROC _____ Class _____

Applicant/Owner Signature_____Date_____

Transportation and Development Department

Form No: UDM-075/Building
Rev: 6-17-11
Page No. 2

Mayor Jay Tibshraeny and the Chandler City Council