HOMEOWNER'S BUILDING
Permit Manual

Chandler • Arizona

Development Services Division
(480) 782-3000

Table of Contents

Introduction 2

How to Obtain a Building Permit 3

Work Exempt from Permit 5

Plot Plan 7

Carport to Garage Conversion 8

Fences and Walls 10

Landscaping 11

Electrical and Gas Permits 15

Patio Covers 17

Storage Sheds/ Open-Air Ramadas/ Detached Buildings and Structures Matrix 22

Arizona Rooms 30

Remodeling 30

Roofing 30

Stucco 30

Fireplaces 32

Room Additions 34

Swimming Pools and Spas 41

Pool Barrier Guidelines 43

List of Required Inspections 48

Appendix A 50

Appendix B 51

Appendix C 52

Introduction

This manual is designed for the Chandler homeowner. It is intended to:

- Identify work that requires a permit.
- Provide information concerning the requirements for obtaining a building permit.
- Provide examples of plans and details that will aid in project completion and code compliance.
- Inform homeowners of the requirements that must be met by them or contractors depending on who is performing the work.
- Answer some of the most commonly asked building code and compliance questions.
- All references are to the International Residential Code or Chandler City code unless noted otherwise. Chandler City Code can be found at: http://www.municode.com/Library/AZ/Chandler. Copies of the International Construction Code Series are available at the City Clerk's office and at http://publicecodes.cyberregs.com/icod/index.htm

It is the responsibility of the homeowner to locate the property lines and to contact the Arizona Blue Stake Center with a request to have all underground utilities located. The Arizona Blue Stake Center can be reached at (602) 263-1100, (800) 782-5348 or 811. You need to call at least two days before you dig.

Please Note:

If the home is in a subdivision with a homeowners' association, the plans should be approved by the association *before* applying to the City for a building permit. The City does not enforce HOA regulations. You are responsible to know and follow any HOA requirements or restrictions.

How to Obtain a Building Permit

The Development Services Construction Permit Counter is located at 215 East Buffalo Street in downtown Chandler.

Any construction requiring a permit also requires that a licensed contractor do the work, unless the owner-applicant performs the work. It is the responsibility of the homeowner or the contractor to obtain a building permit. If you own a home that you lease or rent to others, a licensed contractor is required to obtain a permit. Reference Arizona Revised Statutes 32-1121A located on the Building Permit Application.

Application

It can take up to ten (10) business days to review your miscellaneous residential permit application. Some small projects can be reviewed while you wait. Please call the plan reviewer of the day at (480)782-3078 to see if your project would qualify. When applying for a permit, provide two sets of detailed plans that include:

- Legal description(s) and parcel number(s).
- Plot (site) plan, which must show property lines, all buildings on the lot and dimensions from any new structures to related property lines. This information is available at the Maricopa County Assessor's website: http://maps.mcassessor.maricopa.gov/maps/default.aspx
  Floor plan and building elevations.
- Structural details. Examples: footings, post to beam connections, truss calculations, mechanical fastener descriptions , or other material information.
- Mechanical, plumbing, electrical plans, etc. (if applicable).

Fees

Building permit and plan check fees are charged according to the valuation of your project. The valuation is estimated based on the approximate cost to have a contractor do the job, including labor and materials. The City of Chandler Fee Schedule utilizes the **ICC** Building Valuation Data to determine the minimum value per square foot for newly constructed buildings. If the valuation you provide is less than the valuation in the fee schedule adopted by the City, your permit fees will be based upon the City Fee Schedule. All valuation adjustments are computed as part of the plan review process. The minimum permit fee is $50.00, based on a valuation of $500.00 or less, and the permit fee increases from this point. Please note:

- Plan review fees are due at the time you submit your plans.
- Any project under construction or completed without a permit may be charged a double permit fee.

Codes

The City of Chandler uses the following Codes, please check our website for the current editions:

- International Building Code (IBC)
- International Residential Code (IRC)
- International Plumbing Code (IPC)
- International Mechanical Code (IMC)
- International Fuel Gas Code (IFGC)
- National Electrical Code (NEC)
- International Energy Conservation Code (IECC)
- International Existing Building Code (IEBC)

Please also refer to the Chandler City Code, on the Web at:
http://www.municode.com/Library/AZ/Chandler

- Chapter 29: Building Safety Regulations
- Chapter 35: Land Use and Zoning

Inspections

A list of inspections with their corresponding codes are included on the inspection card provided when the permit is issued.

Inspections may be scheduled on-line at www.chandleraz.gov/clics.

You can track your permit status, review plan review comments and view inspection results.

In addition, you can schedule inspections through an Interactive Voice Response system for building inspection requests. This telephone number is (480) 782-3100. Before calling, you will need:

- Touch-tone telephone.
- Your Permit number.
- An inspection code. These are located on your inspection card.

The Interactive Voice Response system will prompt you through the steps to:

- Schedule an inspection.
- Cancel an inspection.
- Obtain inspection results.

Work Exempt from Permit

A building permit is not required for the following:

1. One-story detached accessory structures provided the floor area does not exceed 120 square feet and the height does not exceed 7 feet.
2. Fences not over 7 feet high.
3. Retaining walls that are not over 4 feet in height measured from the bottom of the footing to the top of the wall, unless supporting a surcharge . City code restricts wall height for front and side yards. Contact the Planner of the Day at 480.782.3050 for more information.
4. Water tanks supported directly on grade if the capacity does not exceed 5,000 gallons and the ratio of height to diameter or width does not exceed 2:1.
5. Sidewalks and driveways.
6. Painting, papering, tiling, carpeting, cabinets, counter tops and similar finish work.
7. Prefabricated swimming pools that are less than 24 inches deep, do not exceed 5,000 gallons and are installed entirely above ground.
8. Swings and other playground equipment. These are only permitted behind a 6-foot high wall in the side or rear yards.
9. Window awnings supported by an exterior wall that do not project more than 54 inches from the exterior wall and do not require additional support . Zoning review is required as a maximum of 24 inches (2 feet) is allowed into required building setbacks.
10. Like for like replacement of residential water heaters and water softeners, furnaces, pool or spa heating equipment, evaporative coolers, water treatment systems, circuit breakers and roof coverings where the replacement roof does not increase the load imposed upon the structural frame.

Additionally a permit is not required for ordinary repairs to structures, replacement of lamps, or the connection of approved portable electrical equipment to approved permanently installed receptacles. Such repairs shall not include the cutting away of any wall, partition or portion thereof; the removal or cutting of any structural beam or load-bearing support; the removal or change of any required means of egress; or rearrangement of parts of a structure affecting the egress requirements. Ordinary repairs shall not include addition to, alteration of, replacement or relocation of any standpipe, water supply, sewer, drainage, drain leader, gas, soil, waste, vent or similar

piping, electric wiring or mechanical or other work affecting public health or general safety.

A permit is required for the installation of a photovoltaic system, a solar hot water heating system or a solar pool heating system. Submittal checklists are available online, http://www.chandleraz.gov/default.aspx?pageid=1061, through the City of Chandler Homeowner's Unified Development Manual Section 9 Building Permit and Construction Standards, or at our Permit Counter located at 215 E Buffalo St.

Exemption from the permit requirements of the code shall not be deemed to grant authorization for any work to be done in any manner in violation of the code or any other laws or ordinances of this jurisdiction.

Plot Plan

Every permit that requires a building plan must be accompanied by a plot plan. You may view an aerial photograph to assist with drawing the layout of the home and all buildings/structures and pools on the property at Maricopa County Assessor's GIS Interactive Maps http://maps.mcassessor.maricopa.gov/ A plot plan is a drawing of the lot showing the following:

- Location of property lines on all sides. The location of street side property lines will vary from 3 to 6 feet behind the sidewalk.
- All existing buildings on the lot, including their dimensions and distances to property lines.
- All proposed additions or structures with their dimensions and distances to property lines.
- Total square footage of the lot, existing buildings and proposed additions.
- Identify all required setbacks. Contact the Planner of the Day at 480.782.3050 for more information. See example below.

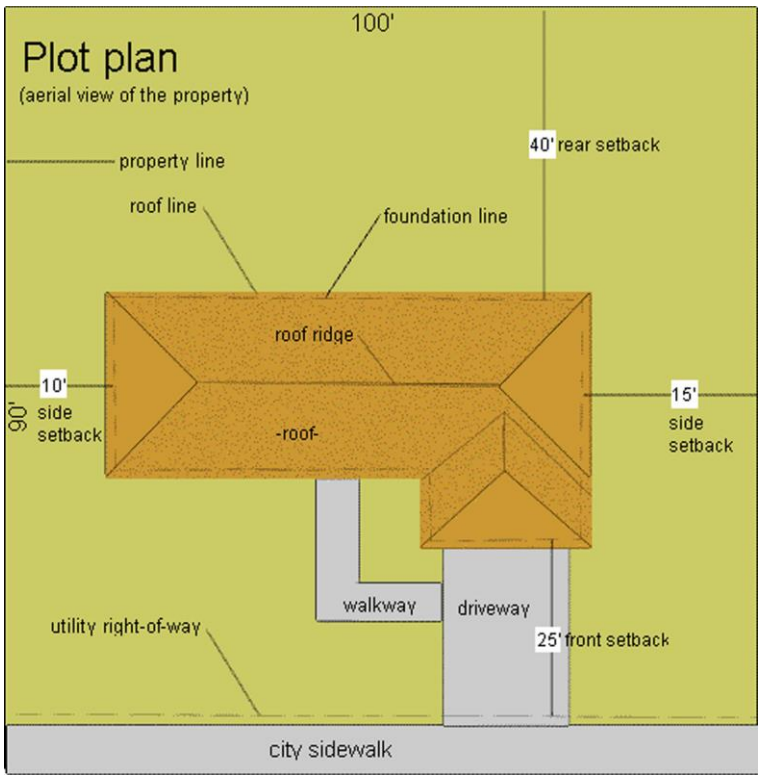

Note: To find the approximate front property line or determine the right-of-way (ROW) width contact the City of Chandler, Transportation & Development Engineering Division at 480.782. 3348.

Carport to Garage Conversion

This section applies to a building permit for a carport to garage conversion that is attached to a primary building. If this project is *not* attached to a primary building, please refer to the section on detached accessory buildings (p. 22). A carport is defined as a structure primarily used for parking vehicles, with 2 sides totally open, with a minimum clear dimension of 9 feet by 19 feet per parking space.

A garage is defined as a structure primarily used for parking vehicles with a minimum clear dimension of 9 feet by 19 feet per parking space.

To obtain a building permit, please submit:

- Completed application.
- Two copies of the plot plan, showing the house, the lot and the carport with distances to property lines.
- Two copies of the building plan, showing applicable details.

The garage shall be separated from the residence and its attic by not less than 1/2 inch gypsum board applied to the garage side. If the dwelling is of masonry construction, it meets the occupancy separation required between the garage and dwelling. There must be a separation between the garage and any living space above by a minimum 5/8 inch type X gypsum board.

Any door into the dwelling from the garage must be self-closing and:

- Minimum 20-minute fire rated; or
- 1⅜-inch solid wood door; or
- Solid or honeycomb core steel doors not less than 1⅜ inches thick.

The required side-hinged main exit door for the house cannot open in to a garage.

Under no circumstances shall a private garage have any opening into a room used for sleeping purposes. . Smoke alarms and carbon monoxide detectors are required when performing <u>interior</u> work that requires a permit, except work such as plumbing or mechanical (air conditioning). If they are not pre-existing throughout the whole house they must be added. Dual (CO & Smoke) alarms are available. They may be required to be interconnected if access is available. Ask your inspector. .

Any main door to the outside must have a landing. The width of each landing shall not be less than the door served. Every landing shall have a minimum dimension of 36 inches measured in the direction of travel.

A switched exterior light is required at the exterior side of each egress door. . A light must also be provided inside the garage and the switch must be located at the interior door. Switches located on the exterior of a building shall be weatherproof.

A minimum of one electrical outlet for each vehicle space is required in a garage (in addition to any provided for laundry or garage door openers). All readily accessible electrical outlets shall have ground fault circuit interrupter (GFCI) protection.

Non-bearing exterior walls added on top of exisiting slabs do not need additional footings, but shall have a bottom plate of treated wood or wood of natural resistance to decay. This bottom plate must be fastened to the slab in an approved manner and must be 4 inches above adjoining finished grade for masonry veneer and 6 inches above for other materials. Usually this requires that you either thicken your slab or build a stem wall. This detail is required as part of your submittal.

The garage conversion must be architecturally integrated with the existing residence. The drawings that are submitted need to clearly indicate what the wall and roof covering are on the existing residence as well as on the proposed garage.

Fences and Walls

It is the responsibility of the homeowner to locate the property lines and to contact the Arizona Blue Stake Center with a request to have all underground utilities located. The Arizona Blue Stake Center can be reached at 602. 263.1100, 811 or 800. 782.5348. You need to call at least two days before you dig.

All fences must be maintained a minimum of 3 feet from fire hydrants or utilities.

If a pool fence is being replaced, the pool area must remain secured during construction.

The maximum fence height is 7 feet in rear and side yards. The maximum fence height in front yards is 3 feet.

If you live on a street corner, whether or not it is an arterial, collector or local street, you must locate your fence so it does not pose as a safety hazard to pedestrians and drivers. City Standard Details on www.udm.chandleraz.gov (Street Standards C-246 to C-248) show the required clearances at corners. Call us at 480. 782.3000 if you have any questions.

A permit is required to build a fence over **7** feet high.

A permit is required if the wall is used for retaining earth and is over 4 feet in height measured from the bottom of the footing to the top of the wall.

A permit is required if a fence is to be placed on top of a retaining wall.

4-inch thick walls are not an approved system to be used as retaining walls.

Regardless of height, all fences or walls require zoning clearance. Zoning staff review and approve the fence/wall placement and type of material. Call 480.782.3050 to speak to the Planner of the Day.

Landscaping

Landscaping does not generally require a permit. However, a permit is needed to install an irrigation system (but no plan review is needed). This permit allows inspectors to check the installation of the required anti-siphon valve or pressure backflow preventer and electrical timers.

The landscape inspector will need access to the main electrical panel for purposes of inspecting the circuit breaker. The circuit breaker must be compatible with the electrical panel brand. Electrical timers may not “piggy-back” on another circuit breaker.

Irrigation System Details

The potable water supply to lawn irrigation systems shall be protected against backflow by:

- An atmospheric-type vacuum breaker; or
- A pressure-type vacuum breaker; or
- A permanently attached hose connection vacuum breaker.

A valve shall not be installed downstream from an atmospheric vacuum breaker. Where chemicals are introduced into the system, the potable water supply shall be protected against backflow by a reduced pressure principle backflow preventer.

Installation

It is recommended that a licensed contractor install the anti-siphon/vacuum breaker assemblies. If someone other than a licensed contractor does the installation, make sure the assembly is positioned correctly with the arrow pointed in the direction of the water flow. The use of lead solder is prohibited.

Any aboveground piping before the anti-siphon/vacuum breaker assembly may be copper or galvanized pipe. If PVC is used, it must be protected from physical damage and be sunlight resistive. All connecting piping installed in the ground before the anti-siphon/vacuum breaker must be buried at least 12 inches deep.

Vacuum breakers shall be installed a minimum of 6 inches above the flood level rim of the fixture or device. The flood level rim of hose connections shall be the maximum height at which any hose is utilized.

Type of Assembly

Atmospheric Anti-Siphon Assembly
Atmospheric anti-siphon assemblies work on the principle of atmospheric pressure. Once the irrigation valve shuts off or if there is a sudden drop in water pressure, a float disc in the assembly drops down to prevent back flow.

- Pipe-applied atmospheric-type vacuum breakers shall conform to ASSE 1001 or CSA B64.1.1.
- Hose connection vacuum breakers shall conform to ASSE 1011, ASSE 1019, ASSE 1035, ASSE 1052, CSA B64.2, CSA 64.2.1, B64.2.1.1, CSA B64.2.2 or CSA B64.7.

These devices shall operate under normal atmospheric pressure when the critical level is installed at the required height. An atmospheric anti-siphon assembly shall be installed at least 6 inches above all downstream piping and sprinkler heads, bubblers or drip emitters. This will keep the vacuum breaker from being subjected to back pressure or drainage.

Pressurized Anti-Siphon Assembly
Pressure-type vacuum breakers shall conform to ASSE 1020 or CSA B64.1.2, and spill-proof vacuum breakers shall comply with ASSE 1056. These devices are designed for installation under continuous pressure conditions when the critical level is installed at the required height. Pressure-type vacuum breakers shall not be installed in locations where spillage could cause damage to the structure. A pressurized anti-siphon assembly provides great flexibility because only one assembly is needed regardless of the number of control valves. The control valves may be placed above or below ground. A pressurized anti-siphon assembly must be in an upright position and at least 12 inches above all downstream piping and sprinkler heads, bubblers or drip emitters. A pressurized anti-siphon assembly includes shut-off valves and test ports that facilitate testing to determine proper operation.

Atmospheric Antisiphon Valve

Pressurized Antisiphon Valve

System Connection

Before installing an underground irrigation system, decide where to make the water source connection. Water professionals recommend the following four options shown.

Whichever option you choose, it is recommended that the anti-siphon/vacuum breaker assembly be installed with its own gate valve. This enables the irrigation system water to be shut off without disrupting water service into the home. Turning off the water at the meter is not recommended. This may cause a leak at the supply line coupling to the meter. All leaks on the home side of the water meter are the owner's responsibility to repair.

Option 1

Connect to the capped extension (copper tee) on the riser (water supply going into the home).

Option 2

Connect to the water faucet line above the riser. An extension tee is added between the faucet and the waterline.

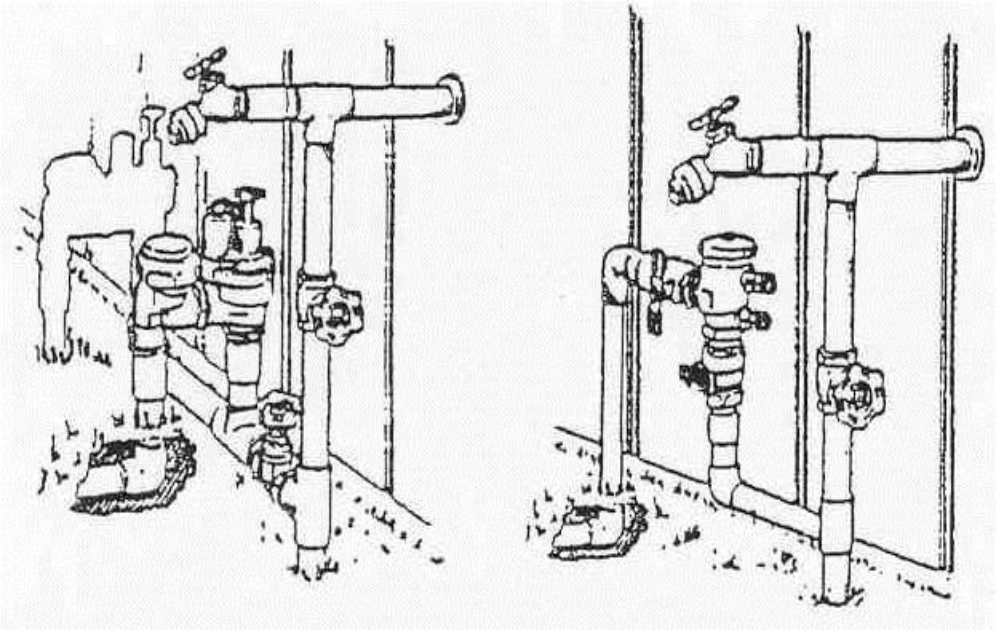

Option 3

Connect to the water service line on the home side of the water meter. At the point of connection, the irrigation line must be 12 inches deep. The connection should be made at least 4 feet from the meter.

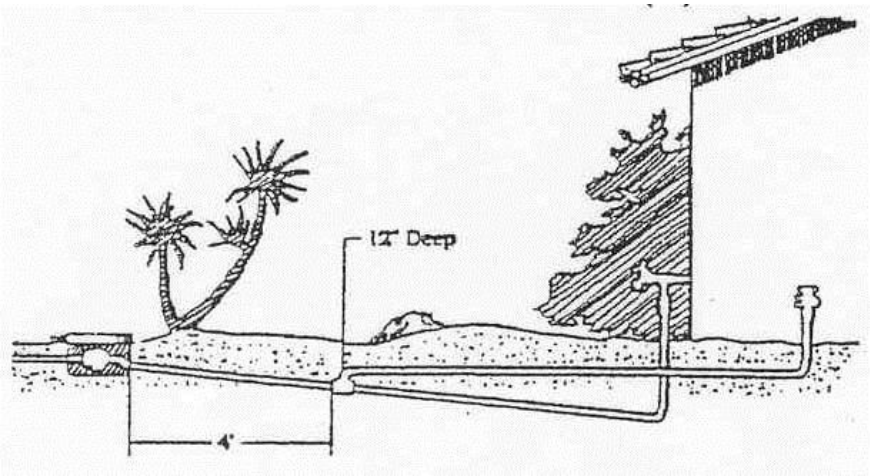

Option 4

Connect to the water faucet line at the back or side of the home. An extension tee is added between the faucet and the waterline. This faucet line is ½ inch in diameter. Since this waterline is generally smaller than the front water faucet line (¾ inch), the irrigation system will have less water pressure. In addition, if the home has a water softener, this faucet line will contain conditioned water, which may be harmful to plants.

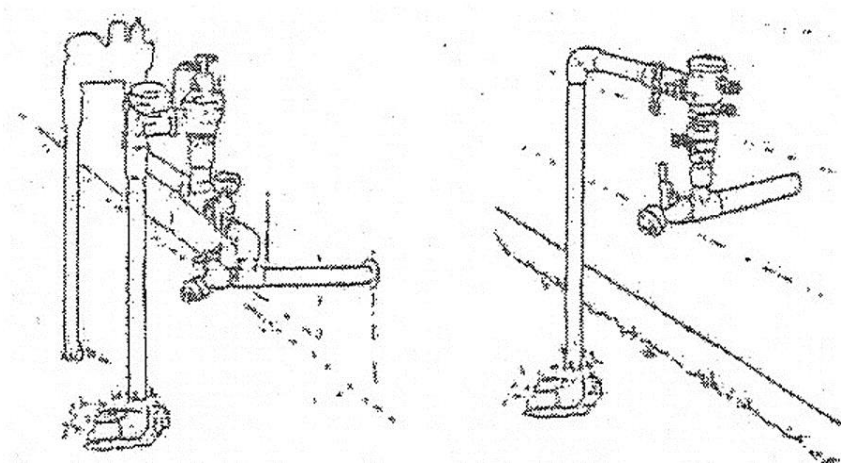

Electrical and Gas Permits

Electrical Permits (200 amp maximum)

Clearly indicate the size and type of conductors (wire) being used, i.e. #6 THHN. Also, indicate the size and type of conduit and the proposed burial depth. Indicate the length of all runs above ground or through an unconditioned space such as an attic.
Provide a panel schedule showing the existing and new breakers if you propose adding a sub-panel. Load calculations may also be required. (See Appendix B at the back of this booklet for a calculation form that you can use to simplify the process.)

Provide grounding electrode conductor and grounding electrode. :

- Grounding electrode is a metallic rod driven into the earth.
- Grounding electrode is a minimum of 8 feet long.
- Grounding electrode conductor must terminate on rod with an acorn clamp.
- Grounding electrode conductor must be a minimum solid #4 AWG bare copper conductor.

If a concrete encased grounding electrode (UFER) is provided, the previous items do not apply. The UFER shall be 20 feet of solid #4 AWG bare copper conductor in concrete with solid #4 AWG bare electrode conductor to the service entrance section.

For homes with metal water or gas piping there are specific requirements for bonding to the electrical service. Because these requirements may vary depending on the locations of the metal pipe it is best to consult an electrician or ask for more specific information at our plan review counter.

All overhead services must have a point of attachment on the weather head mast.

All breakers inside the service panel must be compatible with the panel cover (dead front) and labeled with permanent ink.

Gas Permits

. When adding a gas line inside the residence, or attaching to an existing gas stub out, you will need to:

- Provide a gas riser schematic that shows the length of all sections of the gas line, starting at the gas meter. Show all existing appliances, as well as any proposed additions.
- Provide the total BTU rating of each appliance.
- Provide each line size.
- Provide each line type.

If you propose adding a new gas line from the meter you will need to:

- Show the length of all sections of the gas line, starting at the gas meter.
- Provide the total BTU rating of each appliance.
- Provide each line size.
- Provide each line type.
- Provide trench depth / burial depth(Pipe must be 12” below grade minimum)..

Tests of systems shall be performed at no less than 1-1/2 times the proposed maximum working pressure, but no less than 3 psig. Most residential systems (including propane) will be at 3 psig unless you have a high-pressure system above 2.0 psi. Test duration shall not be less than 10 minutes. All tests must be made through the open valve and flex line. The flex line must be capped at the appliance connection.

The use of heat fusion PE (polyethylene) plastic pipe requires a minimum 12-inch deep trench and a continuous insulated 18-gauge copper tracer wire. PE is not allowed for use beneath any slab, i.e. pool deck, patio, sidewalk, and driveway.

All metal gas piping used in underground systems shall have factory-applied coating, and schedule 40 minimum weight.

Field wrapping is limited to fittings and short sections of piping, where the factory wrap has been damaged or stripped for threading or welding. Field wrapping is made with 2 layers of 20 mil tape with primer on the pipe and between each wrap.

Galvanized fittings or piping are prohibited in underground gas systems.

Patio Covers

Prior to submitting for a permit, please speak with a Planner in the Planning Division for zoning district and minimum building setback requirements to add a patio cover to a residence.

Posts for patio covers will require a footing. The minimum footing size is 18” square and 12” below grade.

Rafters must be sized according to tables in the International Residential Code, and beams must be sized to carry the calculated roof loads. (Laminated beams may not be used in exposed locations unless they are approved for exterior use.) Ledgers supporting rafters must be secured directly to existing wall framing members.

Rafters may not be attached directly to the existing fascia or to roof truss tails. They must bear on the existing wall top plate or attach directly to the house by ledger board that butts directly against vertical studs. (Any stucco or gypsum board covering the studs must be removed.)

The minimum required roof slope is:

Material	**Slope**
Asphalt Shingles	2:12
Clay Tile	2.5:12
Roll Roofing	1:12

The minimum roof slope varies depending on the type of roofing material you propose to use. The type of roofing material shall be indicated on your drawings as well as the roof slope.. There shall be a mechanical path of load transfer from the roof to the foundation. Show all uplift rated connectors, the manufacturer and part number.

The minimum height from the finished floor to the bottom of any beam is 6 feet, 8 inches.

If drywall is installed on the ceiling it must be listed for the application. Please refer to the patio cover details on the following pages. You may copy these details and use them as part of your submittal.

Metal patio covers within 5’ of a swimming pool shall be bonded to the pool equipotential bonding. At least one receptacle outlet that is accessible while standing at grade level and located not more than 6 feet, 6 inches above grade, shall be installed outdoors at the front and back of each dwelling unit having direct access to grade. Balconies, decks, and porches that are accessible from inside of the dwelling unit shall have at least one receptacle outlet installed within the perimeter of the balcony, deck, or porch. The receptacle shall be located not more than 6 feet, 6 inches above the balcony, deck, or porch surface.

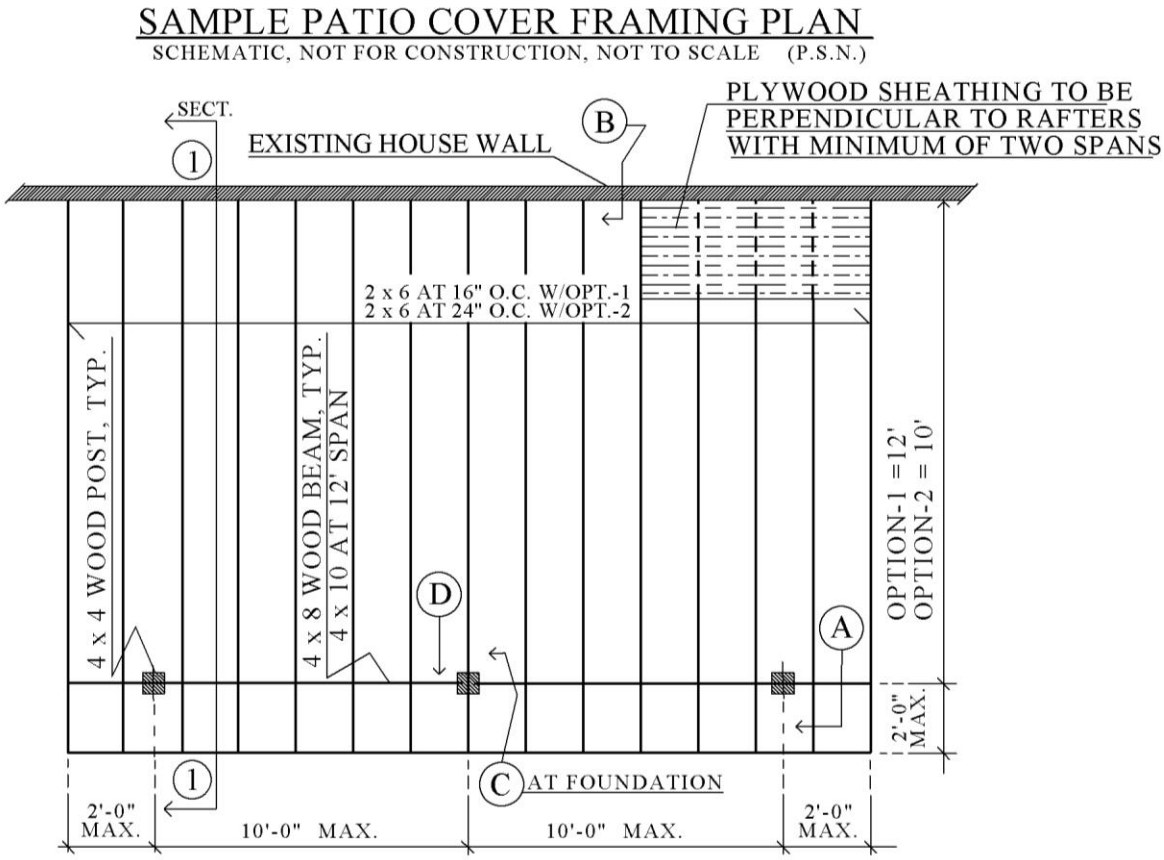
SAMPLE PATIO COVER FRAMING PLAN
SCHEMATIC, NOT FOR CONSTRUCTION, NOT TO SCALE (P.S.N.)
SECT.
1
EXISTING HOUSE WALL
B
PLYWOOD SHEATHING TO BE PERPENDICULAR TO RAFTERS WITH MINIMUM OF TWO SPANS
2 x 6 AT 16" O.C. W/OPT.-1
2 x 6 AT 24" O.C. W/OPT.-2
4 x 4 WOOD POST, TYP.
4 x 8 WOOD BEAM, TYP.
4 x 10 AT 12' SPAN
D
A
OPTION-1 =12'
OPTION-2 = 10'
2'-0" MAX.
C
AT FOUNDATION
2'-0" MAX.
10'-0" MAX.
10'-0" MAX.
2'-0" MAX.

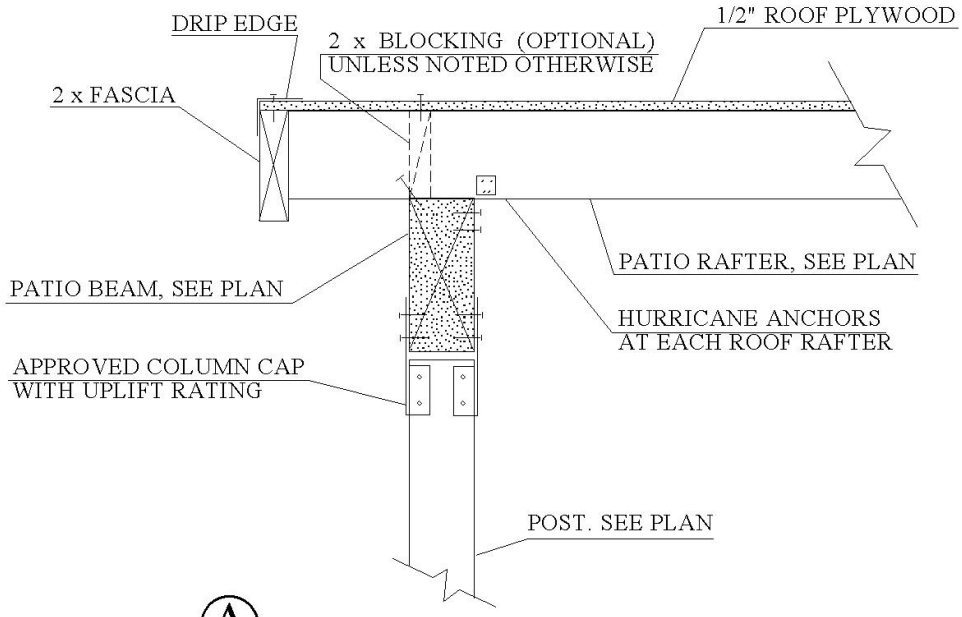

A

PATIO COVER COLUMN TO BEAM

SCHEMATIC, NOT FOR CONSTRUCTION, NOT TO SCALE (P.S.N.)

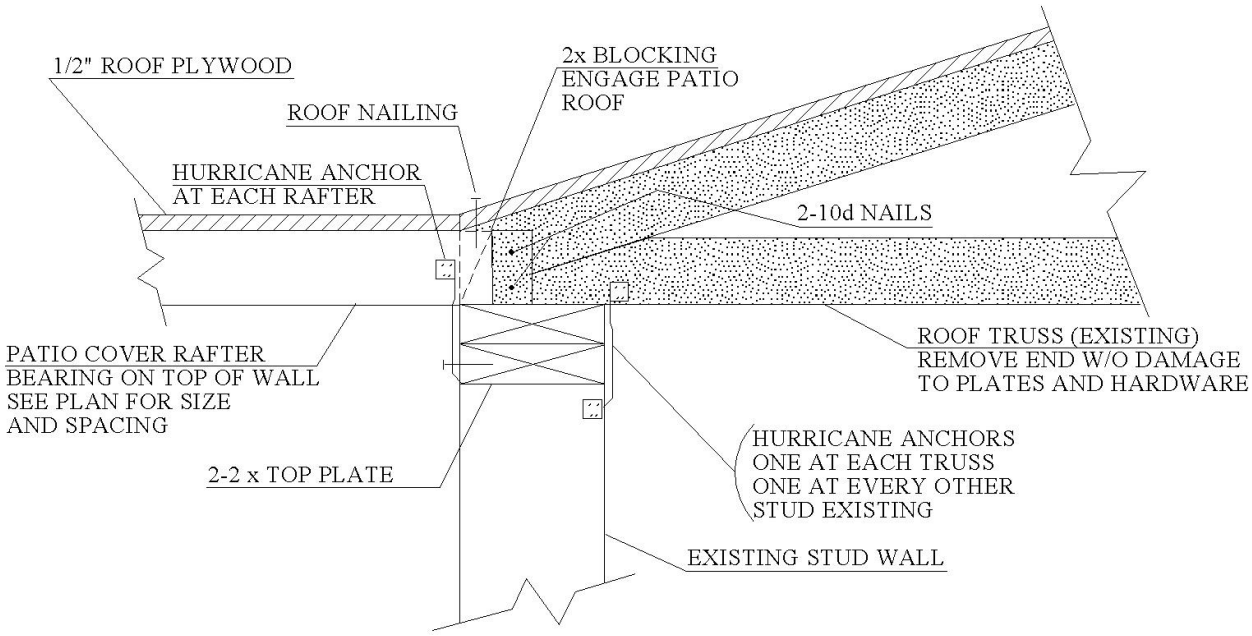

B

PATIO COVER RAFTER AT EXISTING WALL

SCHEMATIC, NOT FOR CONSTRUCTION, NOT TO SCALE (P.S.N.)

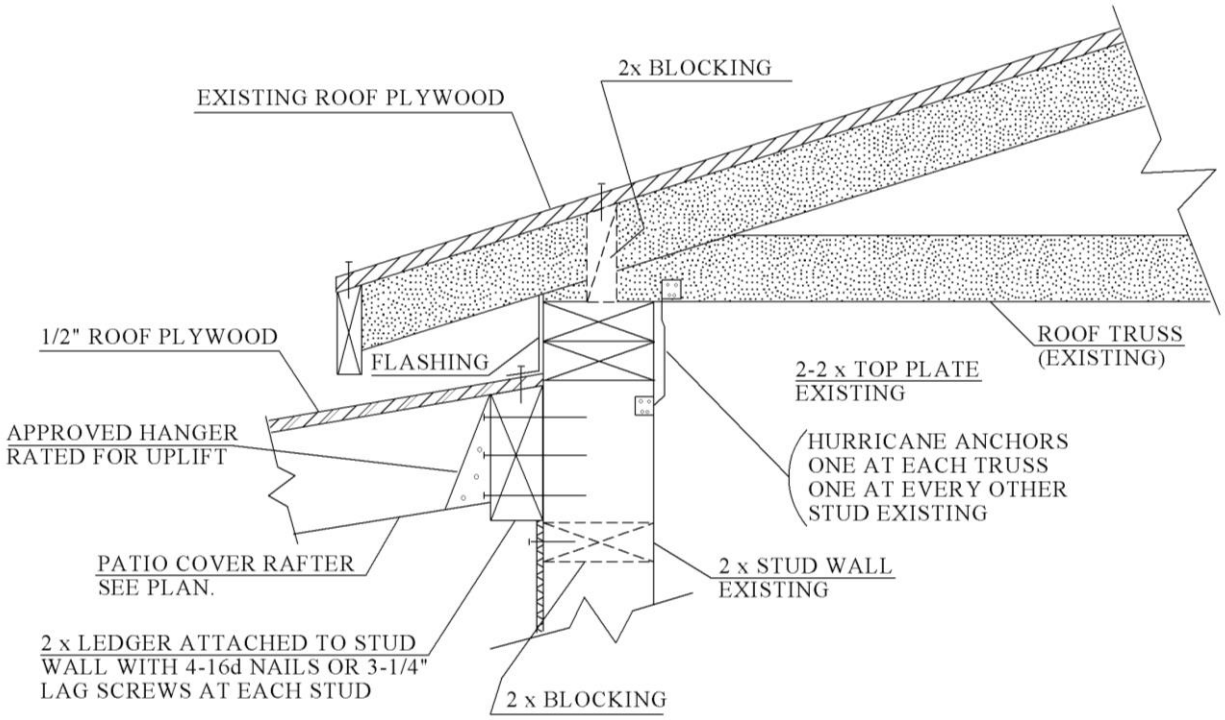

B ALT.

PATIO COVER RAFTER AT EXISTING WALL

SCHEMATIC, NOT FOR CONSTRUCTION, NOT TO SCALE (P.S.N.)

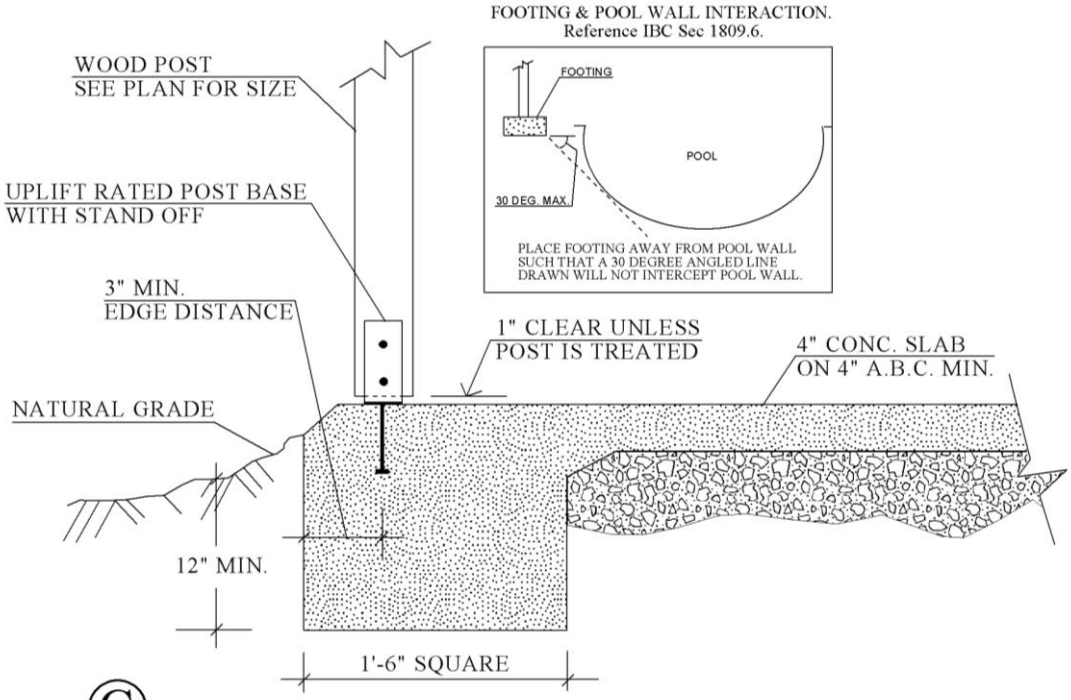

C

FOOTING AT PATIO COVER POST

SCHEMATIC, NOT FOR CONSTRUCTION, NOT TO SCALE (P.S.N.)

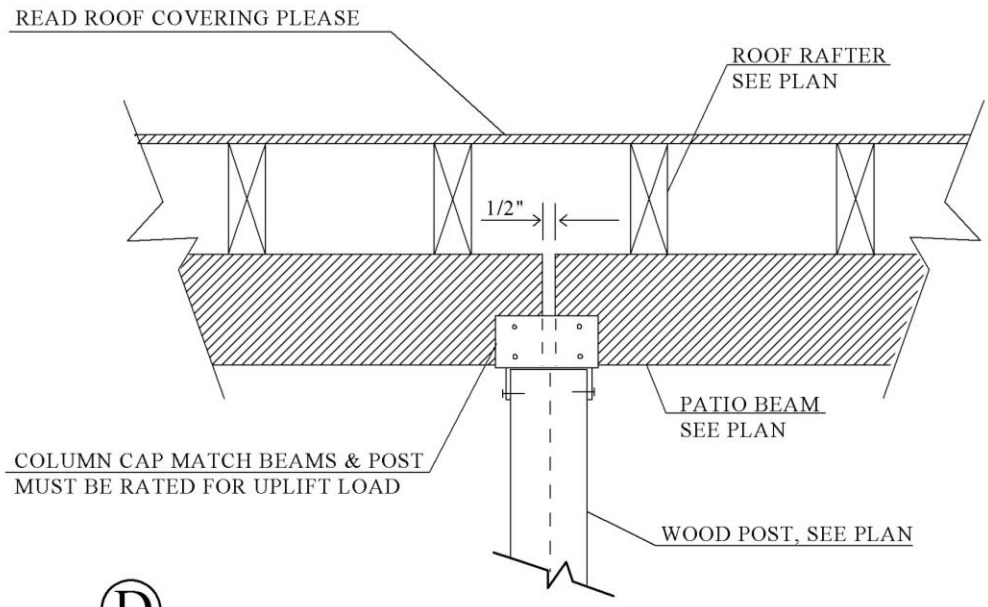

D

BEAMS AT CENTER POST

SCHEMATIC, NOT FOR CONSTRUCTION, NOT TO SCALE (P.S.N.)

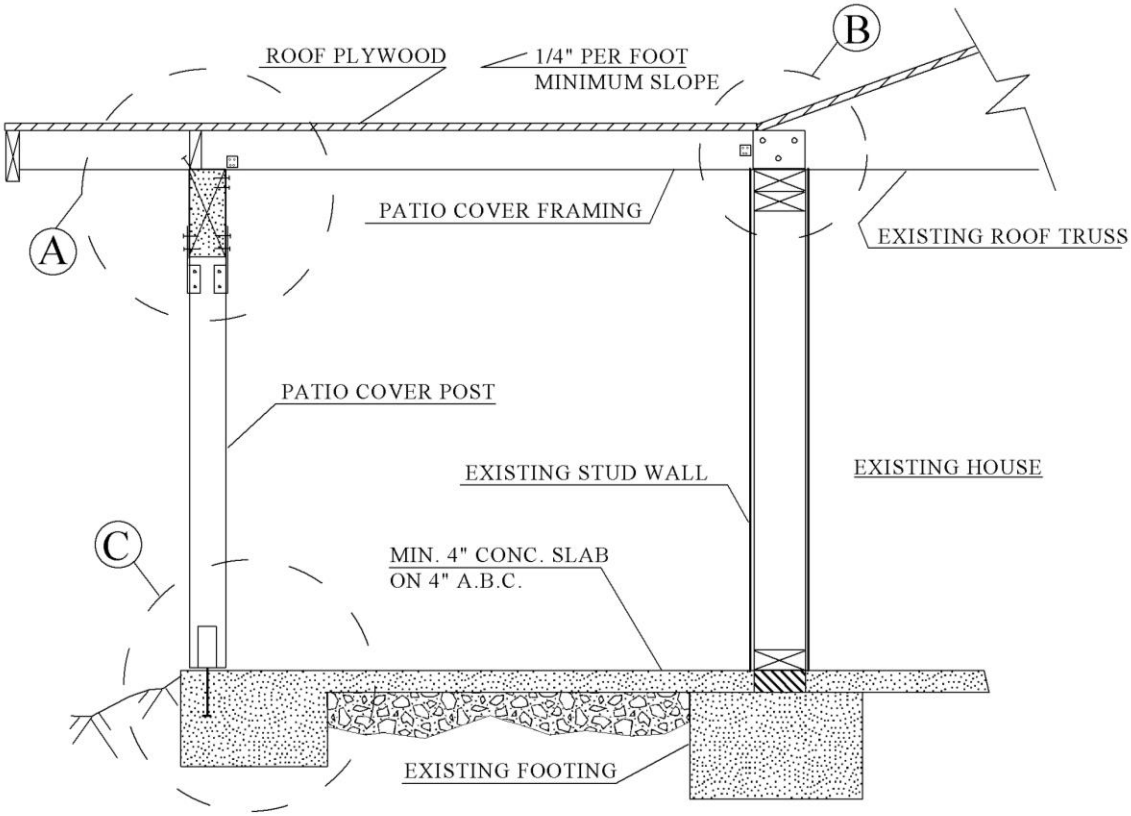

1 1

SECTION AT PATIO COVER

SCHEMATIC, NOT FOR CONSTRUCTION, NOT TO SCALE (P.S.N.)

Storage Sheds/ Open-air Ramadas/ Detached Buildings and Structures Matrix

Prior to submitting for permit, determine zoning requirements for your single-family residential subdivision. For detached buildings and structures such as, for example, storage sheds, open-air ramadas/gazebos, and other accessory buildings, compliance with a property's zoning district is required including minimum building setbacks and maximum lot coverage as applicable. Please speak with a Planner in the Planning Division to determine your subdivision's zoning requirements. Based on the square footage and height proposed, different building setbacks apply. The Matrix defines each type of structure and applicable zoning codes in Chapter 35 (Zoning Code) of the City Code.

See the following pages for Matrix Chart and additional code requirements

CITY OF CHANDLER, ARIZONA
ZONING CODES FOR DETACHED BUILDINGS & STRUCTURES IN RESIDENTIAL ZONING DISTRICTS

Rev. 06/09/14	[INCIDENTAL] SMALL STORAGE SHED Section 200 and Section 2203	ACCESSORY BUILDING/STRUCTURE Section 2202 (various buildings/structures including ramadas and sheds greater than allowed as incidental small type)	[INCIDENTAL] SMALL OPEN-AIR RAMADA Section 200 and Section 2202
MAXIMUM SQUARE FOOTAGE (SQ. FT.)*	120 SQ. FT.	N/A	150 SQ. FT.
***HOW TO MEASURE SQ. FT. SIZE**	FROM EXTERIOR WALLS – DOES NOT INCLUDE ROOF OVERHANG/EAVE/EDGE OF BEAM	FROM EXTERIOR WALLS – DOES NOT INCLUDE ROOF OVERHANG/EAVE/ EDGE OF BEAM	FROM EDGE OF ROOF, WHICH INCLUDES ROOF OVERHANG/EAVE/ EDGE OF BEAM
MAXIMUM HEIGHT*	SEVEN (7) FEET	FIFTEEN (15) FEET	TEN (10) FEET
***HOW TO MEASURE HEIGHT**	GRADE TO VERY TOP OF PITCHED ROOF OR FLAT ROOF	GRADE TO MID-POINT OF A PITCHED SLOPING ROOF OR TOP OF FLAT ROOF	GRADE TO VERY TOP OF PITCHED ROOF OR FLAT ROOF
MAXIMUM OVERHANG INTO BUILDING SETBACK	0 FEET – OVERHANG CAN ABUT PROPERTY LINE	2 FEET (24 INCHES) -MAINTAIN 3-FEET FROM PROPERTY LINE	0 FEET – NO OVERHANG ALLOWED SINCE THIS IS MEASURED FROM EDGE OF BEAMS, ROOF EDGE, ETC. AND ALLOWED AT 5'
SETBACKS – HOW FAR BUILDING/STRUCTURE NEEDS TO BE FROM SIDE AND REAR PROPERTY LINES	NO SETBACKS	MEET MINIMUM REAR AND SIDE YARD SETBACKS FOR ZONING DISTRICT LOT IS LOCATED WITHIN	FIVE (5) FEET REAR AND SIDE PROPERTY LINES AS MEASURED FROM EDGE OF ROOF/COVER. IF REAR YARD ABUTS AN ALLEY OR PUBLIC/PRIVATE COMMON OPEN SPACE (NOT A STREET) THEN NO REAR SETBACK REQUIRED. STRUCTURE MUST BE SEPARATED FROM RESIDENCE BY A DISTANCE EQUAL TO HALF (1/2) OF THE MINIMUM REAR YARD SETBACK
NUMBER OF EACH TYPE OF STRUCTURE PERMITTED ON LOT	ONE (1)	ONE (1)	NO LIMIT, MAINTAIN A MINIMUM ONE (1) FOOT SEPARATION BETWEEN EACH RAMADA MEASURED FROM OVERHANG/EAVE/ EDGE OF BEAM
BUILDING PERMIT NEEDED	NO	YES – check with Building Plan Review staff for requirements	YES – check with Building Plan Review staff for requirements
RESTRICTIONS/OTHER INFO.	Can only locate in side yard or rear yard Cannot be served by utilities Drainage must be kept on-site A masonry/concrete block wall may serve as wall or walls of structure as long as the height of wall is equal to or greater than the maximum height of the storage shed	Cannot occupy more than 30% of the rear yard area, which is the land behind the principal building Can be located behind the front face of the principal building (rear area) thus allowed in the side yard and rear yard If in PAD zoning, accessory buildings are subject to PAD zoning district regulations if more strict than Zoning Code No carport of garage entered from an alley shall be closer than 10 feet to a rear lot line Cannot build accessory building prior to constructing principal building Cannot be used for dwelling purposes per Section 200. No permanent provisions for eating and cooking	Can locate in side yard or rear yard Structure is open on the sides and supporting a roof or lattice-type cover primarily for the purpose of providing shade in conjunction with a recreational activity, i.e. pool, spa, sitting area More than one requires each to be separated by at least 1-foot The incidental Open-Air Ramada is a type of "Accessory Building" per Zoning Code, thus required to comply with not occupying more than 30% of the rear yard area, which is the land behind the principal building

FLAGPOLES – MUST MEET MINIMUM BUILDING SETBACKS. BUILDING PERMIT NEEDED. MAXIMUM HEIGHT 100 FEET.

>>>>>>>>>>>> REMINDER: ALL PROPERTY SUBJECT TO ZONING BUILDING SETBACKS AND MAXIMUM LOT COVERAGE <<<<<<<<<<<<

>>>>> PROPERTY OWNERS/TENANTS ARE RESPONSIBLE FOR CHECKING WITH THEIR HOMEOWNERS ASSOCIATION (HOA) FOR SEPARATE APPROVAL <<<<<

An accessory building cannot be constructed in advance of the principal structure. It cannot be used for dwelling purposes. Indicate the proposed use of your building on your drawings.

Accessory buildings shall be architecturally compatible with the principal building. Provide information on your drawings indicating the paint color and wall and roof covering of the existing principal building.

Prior to building, check with local utility companies for any easement locations.

Utilities may be provided in accessory buildings to include mechanical, plumbing, water sewer, heating, air conditioning, electrical or gas. If your accessory building includes conditioned space, see the requirements on page 32 of the section regarding Room Additions in this manual for the minimum energy efficiency requirements.

Provide a panel schedule showing the existing and new breakers if you propose adding a sub-panel. Load calculations may also be required. (See Appendix B at the back of this booklet for a calculation form that you can use to simplify the process.)

If you plan to use engineered roof trusses on your project, you must submit sealed engineered roof truss calculations with your permit application. Open-web floor truss and manufactured I-joist floor assemblies over 80 square feet require a ½" minimum gypsum board membrane.

Enclosed attics and enclosed rafter spaces formed where ceilings are applied directly to the underside of roof rafters shall have cross ventilation for each separate space by ventilating openings protected against the entrance of rain or snow. Ventilating openings shall be provided with corrosion-resistant wire mesh with ⅛-inch minimum to ¼-inch maximum openings.

The total net free ventilating area shall not be less than 1 to 150 of the area of the space ventilated, except that the total area is permitted to be reduced to 1 to 300, if at least 40 percent and not more than 50 percent of the required ventilating area is provided by ventilators located in the upper portion of the attic or rafter space. Upper ventilators shall be located no more than 3 feet below the ridge or highest point of the space, measured vertically, with the balance of the required ventilation provided by eave or cornice vents. Where the location of wall or roof framing members conflicts with the installation of upper ventilators, installation more than 3 feet below the ridge or highest point of the space shall be permitted.

Unvented attics are now allowed under limited circumstances. Call our Building Plan Reviewers for assistance at (480) 782-3000.

You must include roof vent calculations in your drawings.

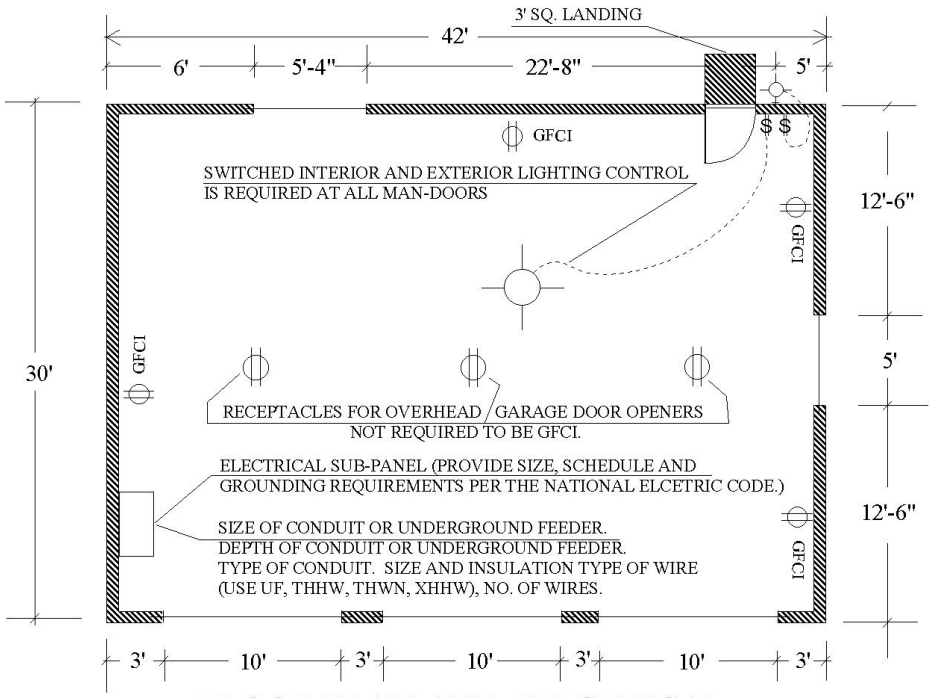

FLOOR PLAN AND ELECTRICAL
FOR TYPICAL ACCESSORY BUILDING

SCHEMATIC, NOT FOR CONSTRUCTION, NOT TO SCALE

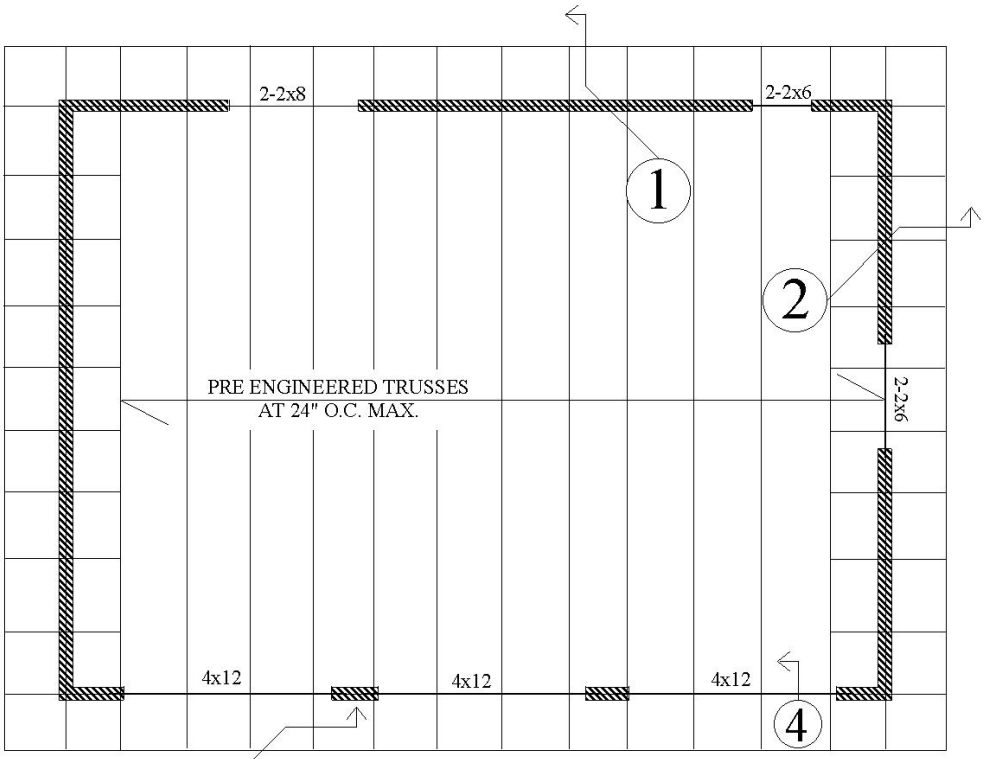

TYPICAL ROOF FRAMING PLAN

SCHEMATIC, NOT FOR CONSTRUCTION, NOT TO SCALE (P.S.N.)

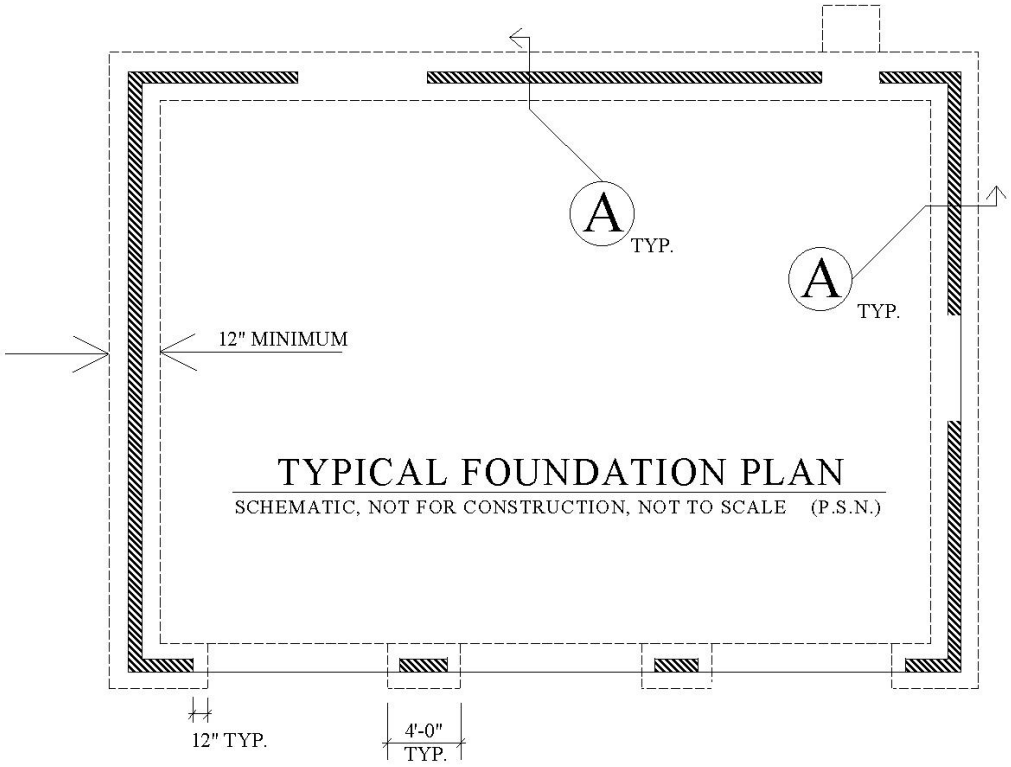

TYPICAL FOUNDATION PLAN

SCHEMATIC, NOT FOR CONSTRUCTION, NOT TO SCALE (P.S.N.)

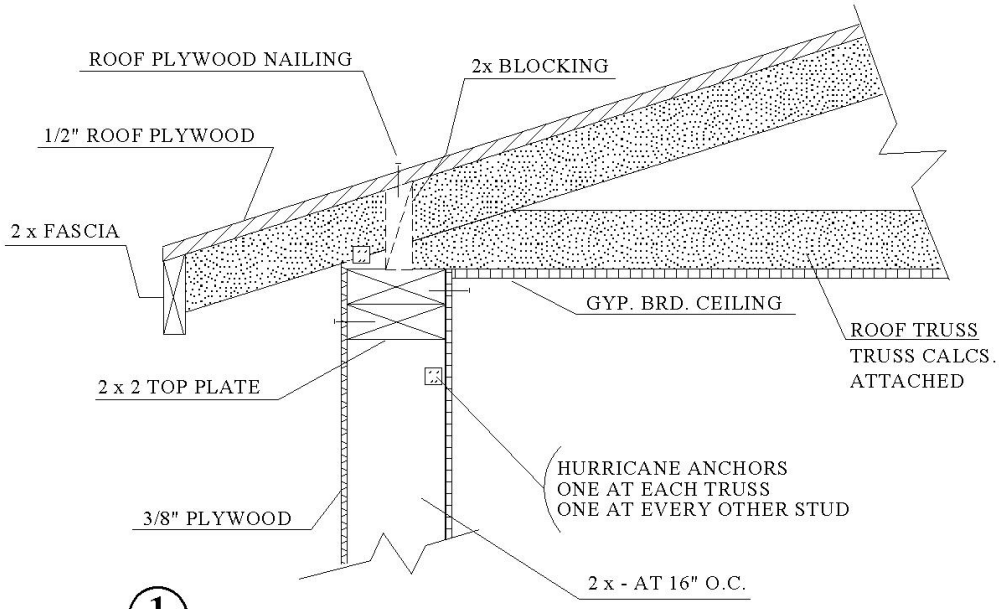

1 ROOF TRUSS AT STUD WALL

SCHEMATIC, NOT FOR CONSTRUCTION, NOT TO SCALE (P.S.N.)

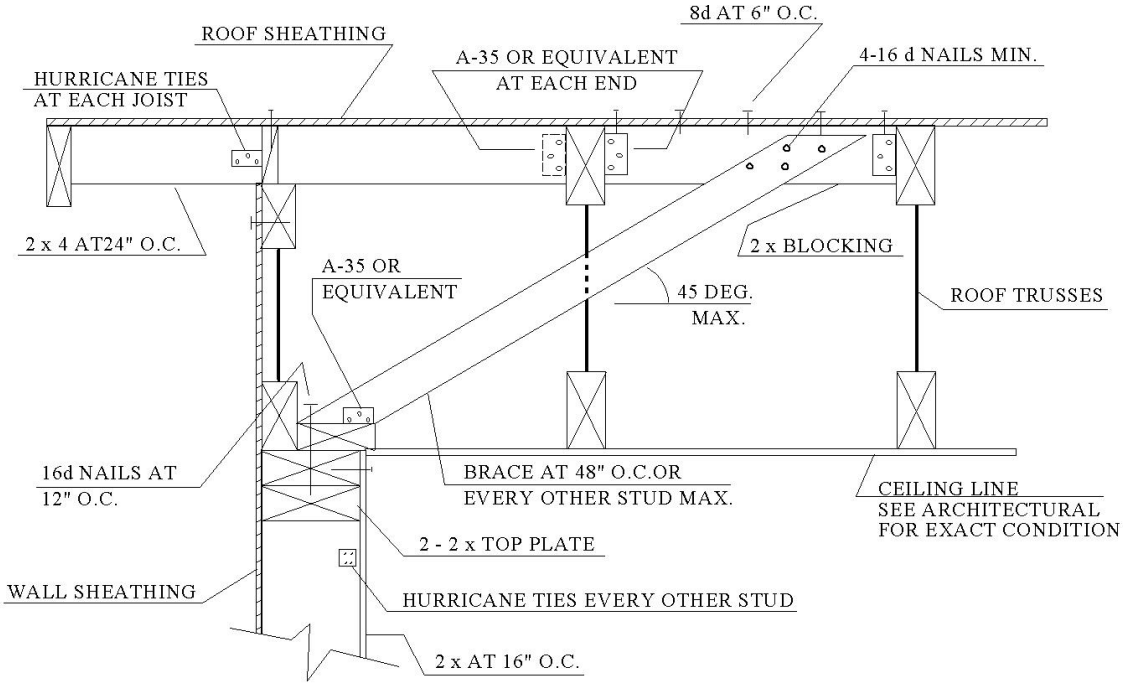

2 GABLE-END BRACE AT ROOF FRAMING

SCHEMATIC, NOT FOR CONSTRUCTION, NOT TO SCALE (P.S.N.)

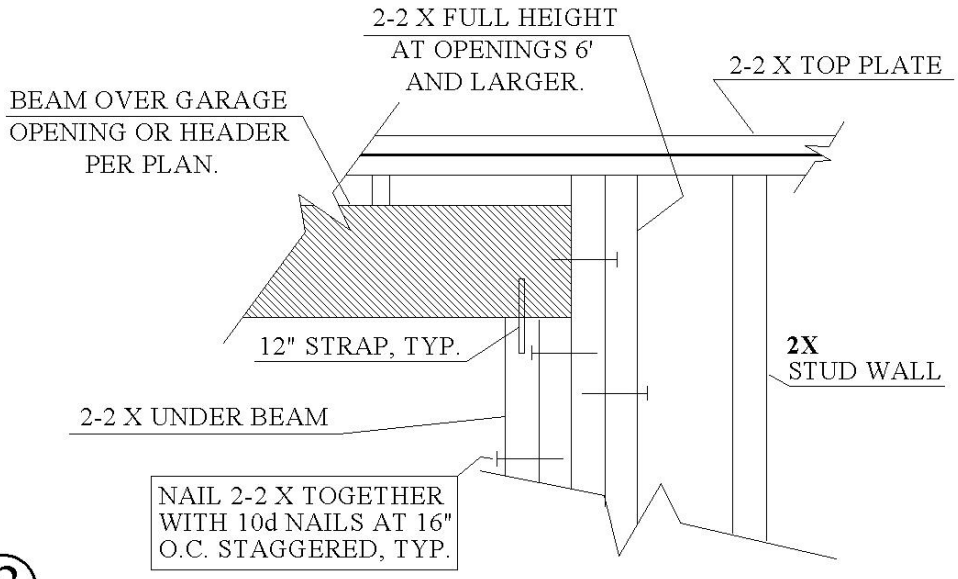

3

TYPICAL JAMB AT GARAGE OPENINGS

SCHEMATIC, NOT FOR CONSTRUCTION, NOT TO SCALE (P.S.N.)

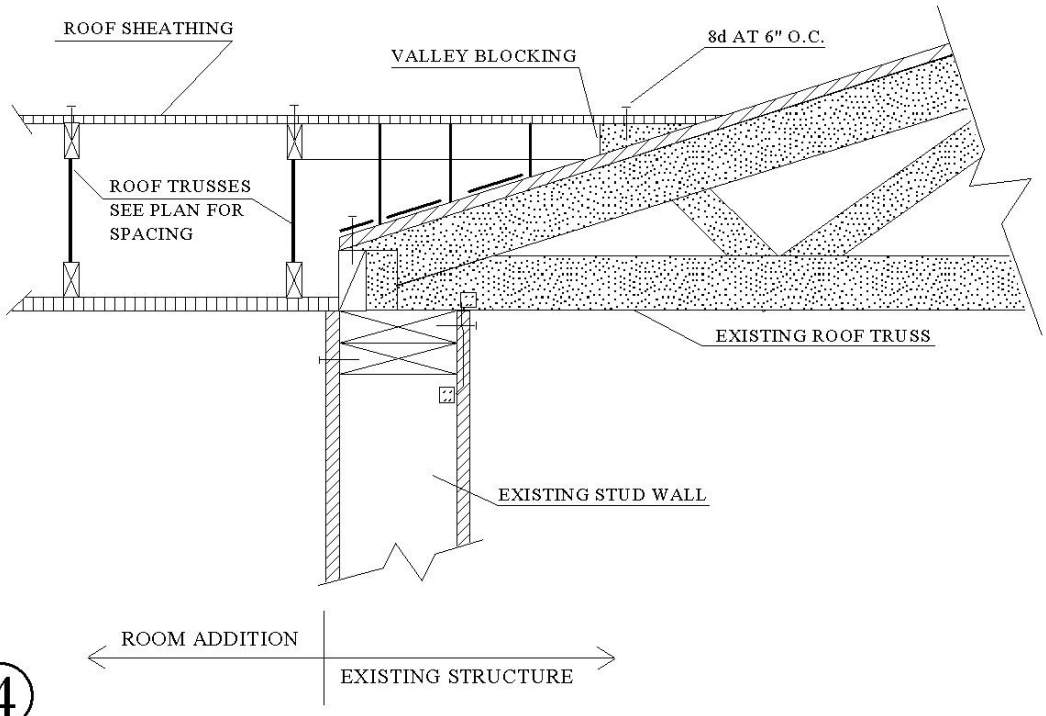

4

NEW ROOF AT EXISTING STRUCTURE

SCHEMATIC, NOT FOR CONSTRUCTION, NOT TO SCALE (P.S.N.)

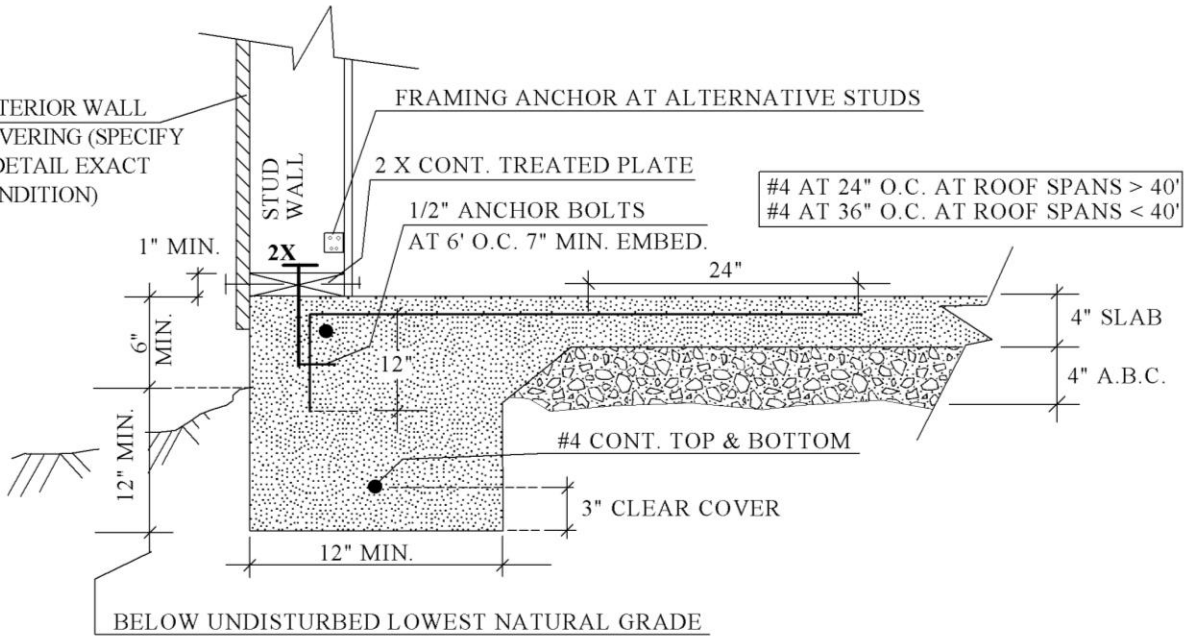

A

MONOLITHIC FOOTING AT STUD WALL

SCHEMATIC, NOT FOR CONSTRUCTION, NOT TO SCALE (P.S.N.)

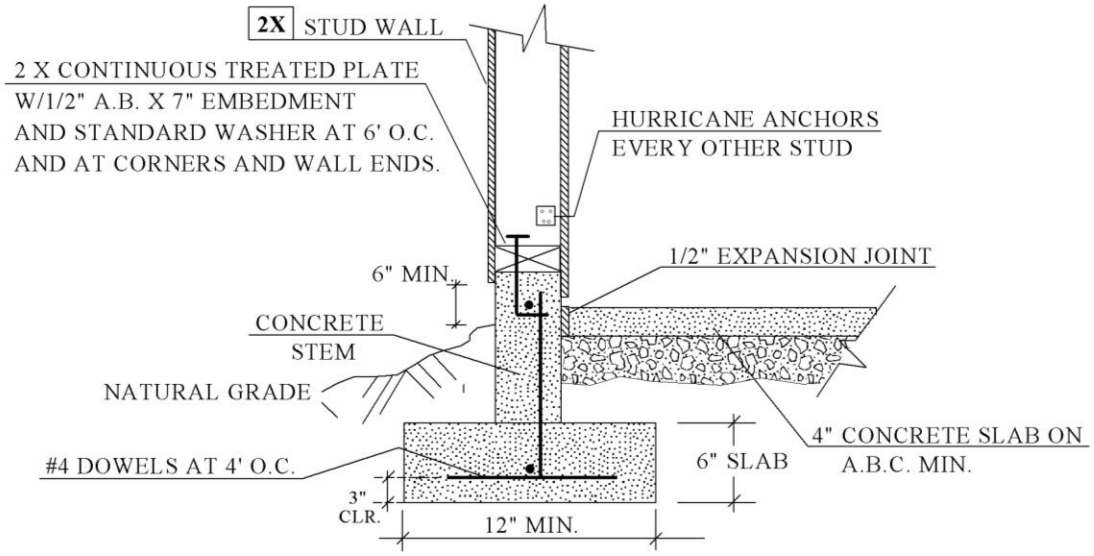

A ALT.

TYPICAL FOOTING AT STUD WALL

SCHEMATIC, NOT FOR CONSTRUCTION, NOT TO SCALE (P.S.N.)

Arizona Rooms

Arizona rooms are defined here as covered patios/porches that are to be enclosed with insect screening or a combination of insect screening and a "knee wall" so that at least 65% of the longer wall and one additional wall, below a minimum of 6 feet 8 inches measured from the floor, is of screen material. These Arizona rooms shall be used only for recreational, outdoor living purposes and not as storage or habitable rooms. The covered roof portion of this structure, whether previously constructed, or constructed in the course of building the Arizona room, shall be designed for a live load of 20 psf. Exterior openings required for light and ventilation shall be permitted to open into the Arizona room.

The City of Chandler does not permit an Arizona room enclosed with windows or a combination of walls and windows as non-habitable space. If you would like to enclose your patio, see the information for room additions. An enclosed patio is considered habitable space and shall comply with all code requirements for habitable space.

Remodeling

A permit is needed for remodeling work not listed as exempt on page 5 of this manual. Remodeling projects typically need to comply with the same requirements listed for room additions. See page 32 of this manual.

Roofing

You need to get a permit to re-roof your house when you are:

- Replacing the old roofing material with a different material such as concrete tile. An engineering analysis is required to determine if the existing roof assembly will withstand the additional loads.
- Replacing the old roofing with like material that already exceeds two layers.

Stucco

You need to get a permit to stucco your house or accessory building:

- "One-coat" Stucco systems require a permit and inspection under all circumstances. The building inspector will need to see that the installation contractor is a licensed applicator. Provide an ICC-ES report for the one-coat stucco when applying for a permit. See http://www.icc-es.org/.
- Other stucco systems, such as a three coat system, require a permit so that the inspectors can ensure that the lath ("chicken wire") and other components are properly installed.
- The only time a permit is not required for a stucco system is if the stucco is being directly applied (no lath) to CMU walls.

Fireplaces

It shall be unlawful for anyone to construct, install, convert or alter any fireplace, stove or any other recreational or aesthetic solid fuel burning devise unless such device and its installation is certified by a nationally recognized testing agency as satisfying the requirements of 40 Code of Federal Regulations, Part 60, Subpart AAA as in effect on July 1, 1990.

Definitions

Effective date means December 31, 1998.

Fireplace means a built-in-place masonry hearth and fire chamber or a factory-built appliance, designed to burn solid fuel or to accommodate a gas or electric log insert or similar device, and which is intended for occasional recreational or aesthetic use, not for cooking, heating or industrial processes.

Solid fuel includes, but is not limited to, wood, coal or other nongaseous or non-liquid fuels, including those fuels defined by the Maricopa County Air Pollution Control Officer as “inappropriate fuel” to burn in residential wood burning devices.

Woodstove means a solid fuel burning heating appliance including a pellet stove, which is either freestanding or designed to be inserted into a fireplace.

Installation Restrictions

All fireplaces or woodstoves constructed on or after 12-31-98 must be one of the following:

1. A fireplace that has a permanently installed gas or electric log insert.
2. A fireplace, woodstove or other solid-fuel burning appliance which has been certified by the Unites States Environmental Protection Agency as conforming to 40 Code of Federal Regulations Part 60, Subpart AAA as in effect on July 1, 1990.
3. A fireplace, woodstove or other solid-fuel burning appliance which has been tested and listed by a nationally recognized testing agency to meet performance standards equivalent to those adopted by 40 Code of Federal Regulations Part 60, Subpart AAA as in effect on July 1, 1990.
4. A fireplace, woodstove or other solid-fuel burning appliance that has been determined by the Maricopa County Air Pollution Control Officer to meet performance standards equivalent to those adopted by 40 Code of Federal Regulations Part 60, Subpart AAA as in effect on July 1, 1990.
5. A fireplace that has a permanently installed woodstove insert, which complies with subsection 2, 3 or 4 above.

In addition to the provisions and restrictions of this section, the construction, installation or alteration of all fireplaces, woodstoves and other gas, electric or solid-fuel burning appliances and equipment shall be done in compliance with the provisions of the construction code and shall be subject to the permits and inspections required by the construction code.

Alterations

On or after the effective date, it shall be unlawful to:

- Alter or remove a gas or electric log insert or a woodstove insert from a fireplace for the purpose of converting the fireplace to directly burn wood or other solid fuel.
- Alter a fireplace, woodstove or other solid fuel-burning appliance in any manner that would void its certification or operational compliance with provisions of this article.

Exemptions

The following installations are not regulated by this section and are not prohibited by this section:

- Furnaces, boilers, incinerators, kilns and other similar space heating or industrial process equipment.
- Cook-stoves, barbeque grills and similar appliance designed primarily for cooking.
- Fire pits, barbeque grills and other outdoor fireplaces.

Room Additions

A room addition is defined as any space added on to an existing dwelling, including the enclosure of an existing covered area, such as a patio cover. Prior to submitting for permit, please speak with a Planner in the Planning Division to determine zoning building setbacks, lot coverage, and architectural design requirements for the residential subdivision. Many residential development's housing products were required to provide a standard rear yard covered patio attached to the home thus closing in a patio cover requires adding another patio cover to the home in order to meet zoning requirements.

To obtain a building permit, please submit:

- Completed application.
- Two copies of the plot plan showing the house on the lot and the proposed room addition with distances to property lines.
- Foundation plans, wall details and exterior elevations.
- Existing and proposed dimensioned floor plan showing windows and sizes, location of plumbing fixtures, electrical outlets, heating, lighting and smoke alarms.

The addition must be architecturally integrated with the existing residence such as building materials, paint color, roofing type, and architectural design. It should not detract from the surrounding residences.

The drawings need to clearly indicate the wall and roof covering and color on the existing residence as well as the proposed addition. You must provide elevation drawings showing both the existing residence as well as the proposed addition.

Show the footing size on your wall section. Continuous footings are a minimum of 12 inches wide and a minimum of 12 inches below grade. The sill plate shall be a minimum of 6 inches above grade.

Typically, any room (other than a bathroom or kitchen) that has a closet shall be considered a sleeping room and will need to meet all sleeping room requirements.

Sleeping rooms, as well as the area outside of sleeping rooms, are required to have smoke alarms. When interior alterations, repairs or additions requiring a permit are made, or when one or more sleeping rooms are added or created in existing dwellings, the individual dwelling unit shall be provided with smoke alarms located as required for new dwellings. Smoke alarms and Carbon monoxide detectors are required when performing Interior work that requires a permit, except work such as plumbing or mechanical (air conditioning). If they are not pre-existing throughout the whole house they must be added. Dual (CO & Smoke) alarms are available. They may be required to be interconnected if access is available. Ask your inspector.

Any main door to the outside must have a landing. The width of each landing shall not be less than the door served. Every landing shall have a minimum dimension of 36 inches measured in the direction of travel.

A switched exterior light is required at the exterior side of each exterior door.

Any wood framed non-bearing wall to be added above an existing slab may not need its own footing. It shall have a bottom plate of treated wood or wood of natural resistance to decay. This bottom plate must be fastened to the slab in an approved manner and must be a minimum of 6 inches above an adjacent unfinished exterior grade.

Any wood framed bearing wall shall have its own footing, a bottom plate of treated wood or wood of natural resistance to decay, must be secured in an approved manner and must be a minimum of 6 inches above an adjacent unfinished exterior grade.

If you plan to use engineered roof trusses on your project, you must submit sealed engineered roof truss calculations or the roof truss design review waiver with your permit application. The waiver requires the seal of a State of Arizona registered architect or engineer. Provide a complete floor plan of the room adjacent to the proposed room addition. Indicate the size of the existing room, the size and location of all exterior doors and windows. If you propose to remove or cover existing windows, this information must be included in your drawings.

Provide every dwelling unit with heating facilities capable of maintaining a minimum room temperature of 68°F at a point 3 feet above the floor and 2 feet from exterior walls in all habitable rooms. Portable space heaters shall not be used to achieve compliance with this requirement. Indicate how the required heating will be provided.

At least one wall switch controlled lighting outlet shall be installed in every habitable room and bathroom.

Install receptacle outlets so that no point along the floor line in any wall space is more than 6 feet (measured horizontally) from an outlet in that space.

All branch circuits that supply 125-volt, single-phase, 15- and 20-ampere outlets installed in ***all habitable rooms*** shall be protected by an arc-fault circuit interrupter. Also, all new 15 and 20V receptacles shall be tamper-proof except receptacles located more than 5.5 feet above the floor, receptacles that are part of a luminaire or appliance, or receptacles dedicated to refrigerators or freezers (appliances not easily moved).

A receptacle outlet shall be installed at each kitchen wall counter space 12 inches or wider. Receptacle outlets shall be installed so that no point along the wall line is more than 24 inches measured horizontally from a receptacle outlet in that space. Exception: Receptacle outlets shall not be required on a wall directly behind a range or sink. At least one receptacle outlet shall be installed at islands and peninsulas with a long dimension of 24” or greater and a short dimension of 12” or greater. All 125 volt 15 and 20 amp receptacle outlets serving kitchen countertop spaces shall have Ground-fault

circuit interrupters (GFCI) protection. GFCIs shall be installed in a readily accessible location. For example, the GFCI protector may not be behind a refrigerator.

All 125-volt, single phase, 15- and 20-ampere receptacles installed outdoors shall have GFCI protection.

At least one wall receptacle outlet shall be installed in bathrooms. It must be located within 36 inches of the outside edge of each lavatory basin. The receptacle outlet shall be located on a wall that is adjacent to the lavatory basin location. All 125-volt, single-phase, 15- and 20-ampere receptacles installed in bathrooms shall have GFCI protection.

Provide a panel schedule showing the existing and new breakers if you propose adding a sub-panel. Load calculations may also be required. (See Appendix B at the back of this booklet for a calculation form that you can use to simplify the process.)

Every sleeping room shall have at least one operable emergency escape and rescue opening.

- If the opening is a window, it shall have a sill height of not more than 44 inches above the floor.
- Emergency escape and rescue openings above or below grade floor shall have a minimum net clear opening of 5.7 square feet.
- Grade floor openings shall have a minimum net clear opening of 5 square feet.
- The minimum net clear opening height shall be 24 inches.
- The minimum net clear opening width shall be 20 inches.
- Emergency escape and rescue openings shall be operational from the inside of the room without the use of keys or tools.

Enclosed attics and enclosed rafter spaces formed where ceilings are applied directly to the underside of the roof rafter shall have cross ventilation for each separate space by ventilating openings protected against the entrance of rain or snow. Ventilating openings shall be provided with corrosion-resistant wire mesh, with ⅛-inch minimum to ¼-inch maximum openings.

The total net free ventilating area shall be not less than to 1 to 150 of the area of the space ventilated, except that the total area is permitted to be reduced to 1 to 300, if at least 40 percent and not more than 50 percent of the required ventilating area is provided by ventilators located in the upper portion of the attic or rafter space. Upper ventilators shall be located no more than 3 feet below the ridge or highest point of the space, measured vertically, with the balance of the required ventilation provided by eave or cornice vents. Where the location of wall or roof framing members conflicts with

the installation of upper ventilators, installation more than 3 feet below the ridge or highest point of the space shall be permitted.

You must include roof vent calculations in your drawings.

Please provide a water meter work sheet if you are adding plumbing fixtures (see Appendix A for an example). This information must be on the plans, not a separate sheet.

Any addition of conditioned space shall meet the minimum energy efficiency requirements of Chapter 11 of the International Residential Code. (Compliance with Chapter 4 of the International Energy Conservation Code is also acceptable.) Following are the minimum requirements from Table N1102.1 of the International Residential Code:

• Windows/Skylights	U-Factor	.40/.65
• Windows/Skylight	Solar Heat Gain Coefficient	.25/.25
• Ceiling	R-Value	38
• Wood Frame Wall	R-Value	13
• Mass Wall	R-Value	4/6*
• Floor **	R-Value	13

*The R-6 value is for when over ½ of the walls insulative value is provided on the interior of the building.
**This is not a slab on grade, this would be the value for a typical framed floor.

For existing buildings, the thermal envelope shall be durably sealed to limit infiltration. The following shall be caulked, gasketed, weather-stripped, or otherwise sealed. For new construction, testing is required.

- All joints, seams and penetrations.
- Site-built windows, doors and skylights.
- Openings between window and door assemblies and their respective jambs and framing.
- Utility penetrations.
- Dropped ceilings or chases adjacent to the thermal envelope.
- Knee walls.
- Walls and ceilings separating the garage from conditioned spaces.
- Behind tubs and showers on exterior walls.

- Common walls between dwelling units.
- Other sources of infiltration.
- Tile backer (dens-shield) at showers. No green board allowed.

As of 2/25/2013, supply ducts may be insulated to a minimum of R-6 when one or more of the following conditions are met, as an alternate design method. 1.) Minimum SEER rating of space heating/cooling system is increased to 15. 2.) Maximum U-factor is decreased to .35 and maximum SHGC is decreased to 0.22 for all fenestration. 3.) Wall cavity insulation minimum R-value is increased to R-19. 4.) Single family residences constructed to an above code program as described in the IECC section 102.1.1 or N11101.8 are exempt.

Otherwise, supply and return ducts shall be insulated to a minimum of R-8. Mechanical system piping capable of carrying fluids and circulating hot water systems shall be insulated to a minimum of R-2. A permanent certificate shall be posted on or in the electrical distribution panel. The certificate shall be completed by the builder or registered design professional. The certificate shall list the predominant R-values of insulation installed in or on ceiling/roof, walls, foundation and ducts outside conditioned spaces; U-factors for fenestration; and the solar heat gain coefficient (SHGC) of fenestration (windows/glass doors/skylights). Where there is more than one value for each component, the certificate shall list the value covering the largest area. The certificate shall list the type and efficiency of heating, cooling and service water heating equipment. (The blank certificate is provided with your building permit.)

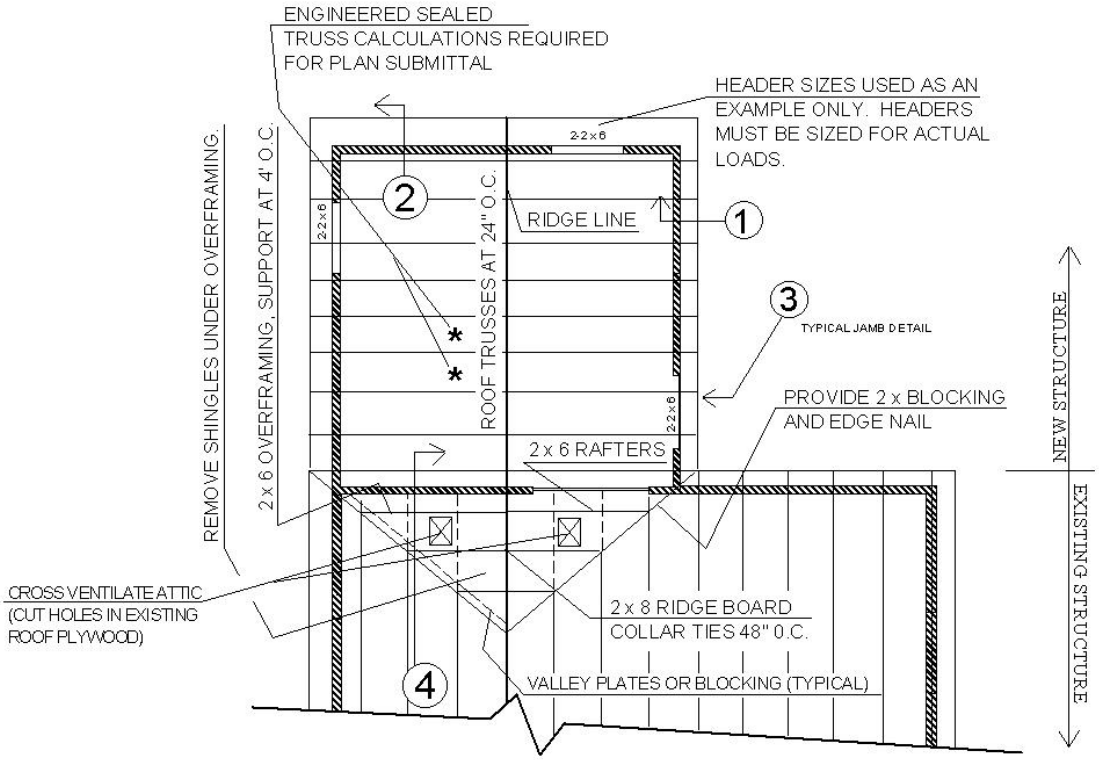

ROOF FRAMING AT ADDITION TO EXISTING BUILDING

SCHEMATIC, NOT FOR CONSTRUCTION, NOT TO SCALE

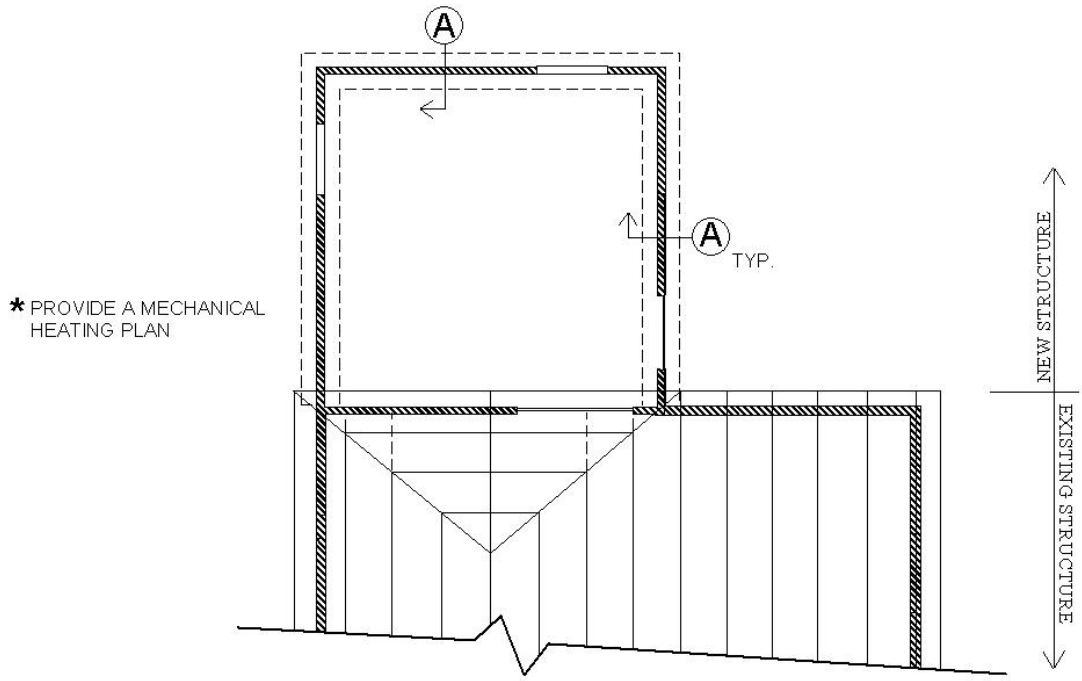

FOUNDATION PLAN FOR ROOM ADDITION

SCHEMATIC, NOT FOR CONSTRUCTION, NOT TO SCALE

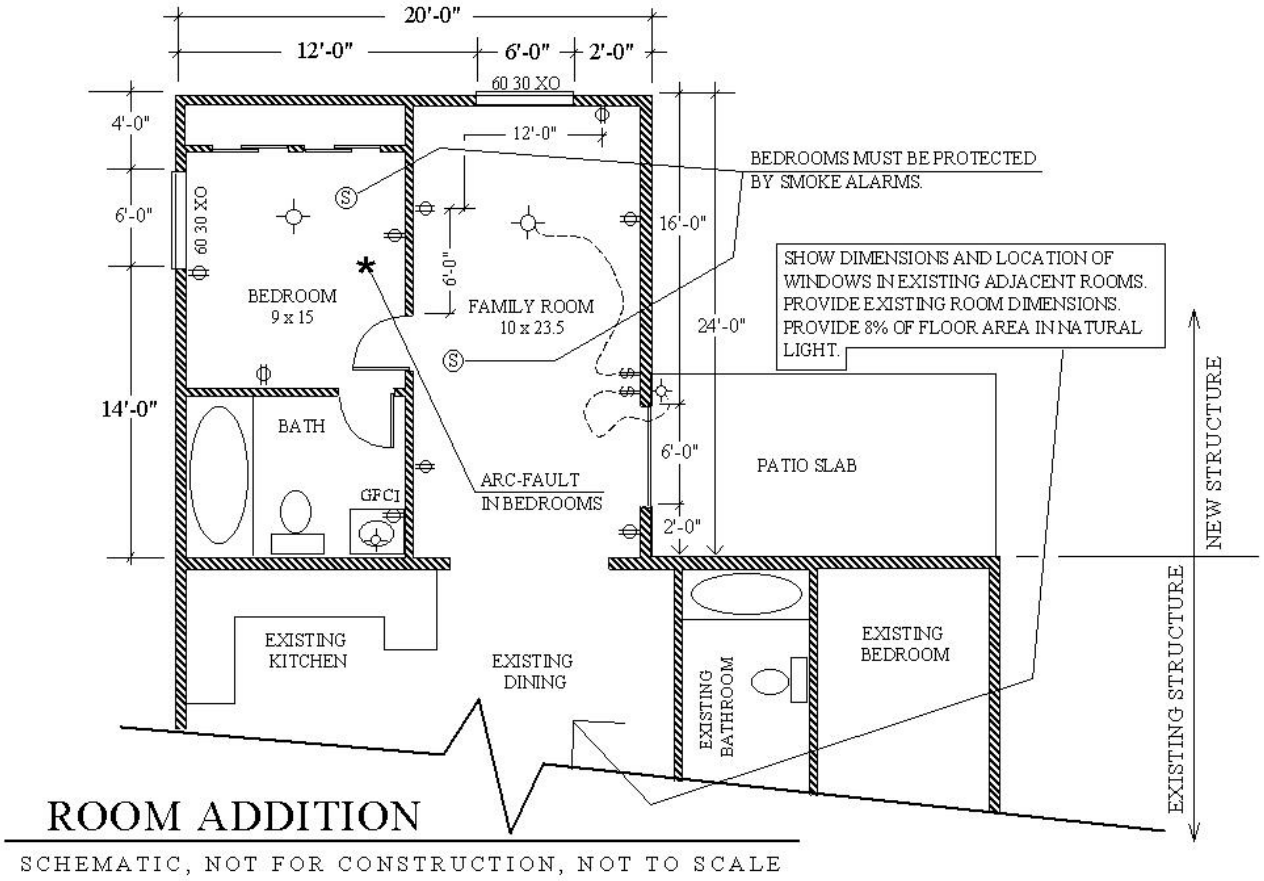
20'-0"
12'-0"
6'-0"
2'-0"
60 30 XO
4'-0"
6'-0"
14'-0"
60 30 XO
12'-0"
BEDROOMS MUST BE PROTECTED BY SMOKE ALARMS.
16'-0"
6'-0"
BEDROOM
9 x 15
FAMILY ROOM
10 x 23.5
24'-0"
SHOW DIMENSIONS AND LOCATION OF WINDOWS IN EXISTING ADJACENT ROOMS. PROVIDE EXISTING ROOM DIMENSIONS. PROVIDE 8% OF FLOOR AREA IN NATURAL LIGHT.
BATH
GFCI
ARC-FAULT IN BEDROOMS
6'-0"
PATIO SLAB
2'-0"
NEW STRUCTURE
EXISTING KITCHEN
EXISTING DINING
EXISTING BATHROOM
EXISTING BEDROOM
EXISTING STRUCTURE
ROOM ADDITION
SCHEMATIC, NOT FOR CONSTRUCTION, NOT TO SCALE

Swimming Pools and Spas

Definition: Per the City municipal code, a swimming pool is any body of water with a depth greater than 18 inches.

All pools and spas require a permit, whether constructed above or below ground (other than those referenced in item 9 on page 5 of this manual).

Pool engineering plans, stamped and sealed by an engineer, are required on all custom in ground pools and spas. Plans are required on all pre-manufactured above ground pools and spas.

Swimming pools shall not occupy any front yard nor shall the water's edge be located closer than 5 feet to any side or rear property line.

The water's edge must be a minimum of 5 feet from the fence for all pools constructed on a lot with an offset property line and/or an offset fence.

A pool or cool decking cannot be constructed across a property line.

An engineered surcharge design is required for in-ground pools built closer than 5 feet to a building foundation.

Pool equipment must be 5 feet from the water's edge.

Prior to construction, all easements must be cleared by the utility companies.

Any glazing within 5 feet of the water's edge where the bottom edge of the glazing is less than 60 inches above grade must be safety glazed. Tinting film may not be used to satisfy this requirement.

Pool Barrier Guidelines

Please note: the pool barrier requirements must be met whether or not children of any age are living at the dwelling.

Barrier

Pool barriers shall be an interior fence, perimeter wall, building wall or a combination thereof, which completely surrounds the swimming pool. The top of the exterior barrier, including all gates and doors therein, shall not be less than 6 feet above finished floor or finished grade measured on the exterior side of the enclosure. An interior barrier separating a dwelling from a pool may be 4 feet in height.

There shall be no horizontal or vertical openings, holes, or gaps in the interior barrier large enough for a sphere 4 inches in diameter to pass through. The maximum vertical clearance between grade and the bottom of the barrier shall be 2 inches measured on the side of the barrier that faces away from the pool.

A barrier fence or wall shall have no handholds, footholds or horizontal members accessible from the exterior side of the enclosure. Horizontal members of fences shall be spaced not less than 45 inches apart measured vertically, or shall be placed on the pool side of a fence which has no opening greater than 1¾ inches measured horizontally. Wire mesh or chain link fences shall have a maximum mesh size of 2 ¼ inches square.

In addition, the exterior fence enclosure for swimming pools (as required by Chapter 35-2205 of the City Code) need not necessarily be located on the side or rear property lines but can be within property boundaries. Exterior fencing can be a masonry or concrete wall, decorative fencing (such as wrought iron), or a durable wire mesh as along as the spacing between horizontal and vertical members does not exceed one and three-quarter (1 ¾) inches. .

Gates and Doors

All pedestrian access gates in a pool barrier shall be self-closing and self-latching and must open outward from the pool. Gate latches shall be located not less than 54 inches above finished grade or shall otherwise be made inaccessible from the outside by small children. (See Graphic B on page 46 at end of this section).

All exterior hinged or sliding doors leading from a dwelling unit, bedroom, garage or storage room directly into a swimming pool enclosure shall be self-closing or shall be equipped with audible alarms. Hinged doors shall open away from the pool area.

Self-closing devices shall consist of one of the following:

- Spring loaded hinges.

- Pneumatic closures (without stops).
- Approved sliding glass door closures.

Latching mechanisms shall consist of one of the following:

- Passage lock located 54 inches above the finished floor.
- Double cylinder gate latch installed at any height, provided the door is not required for emergency egress.
- Sliding glass door latches shall be located 54 inches above the finished floor.

Alarms shall produce an audible warning when the door and/or its screen, if present, are opened. The alarm shall be listed in accordance with UL 2017. The alarm deactivation has to be 54" above finish floor.

If a pet door is large enough that a sphere 4 inches in diameter will pass through, and is located in any wall of the dwelling that forms a part of the interior barrier, it must be able to be rendered unusable with a latching device inoperable by young children so the slide portion of the pet door cannot be removed.

Windows

All windows facing on a swimming pool enclosure shall be equipped with a latching device.

For emergency escape or rescue windows, the latching device shall be located not less than 54 inches above the finished floor.

For all other operable dwelling unit or garage windows, the latching device shall consist of one of the following:

- A keyed lock that prevents opening the window more than 4 inches.
- A screwed-in-place wire mesh screen.
- A latching device located not less than 54 inches above the finished floor.

Above Ground Swimming Pools

All above ground pools, with non-climbable sides not less than 48 inches high above the finished grade, may be located on a single-family residential property without requiring an interior fence, wall or barrier between the pool and the dwelling. Where an aboveground pool structure is used as a barrier or where the barrier is mounted on top of the pool structure, and the means of access is a ladder or steps, then the ladder or steps either shall be capable of being secured, locked or removed to prevent access, or the ladder or steps shall be surrounded by a barrier that meets the requirements of an in

ground pool. When the ladder or steps are secured, locked or removed, any opening created shall not allow the passage of a 4-inch-diameter sphere.

Entrapment Avoidance

Suction outlets shall be designed to produce circulation throughout the pool or spa. Single outlet systems, such as automatic vacuum cleaner systems, or other such multiple suction outlets whether isolated by valves or otherwise shall be protected against user entrapment.

No one needs to be home for the first inspection, which is the pre-gunite inspection. PLANS AND PERMIT MUST BE AVAILABLE.

The homeowner must be present for the second inspection (pre-plaster inspection) if the house forms part of the interior barrier around the pool or there is no interior pool fence. However, if an interior fence encompasses the entire pool, then the homeowner does not need to be present for the second inspection.

All electrical service panels must be left unlocked for the inspector

Inspections that require entry into the home will not be conducted unless a responsible adult is present.

Graphic A

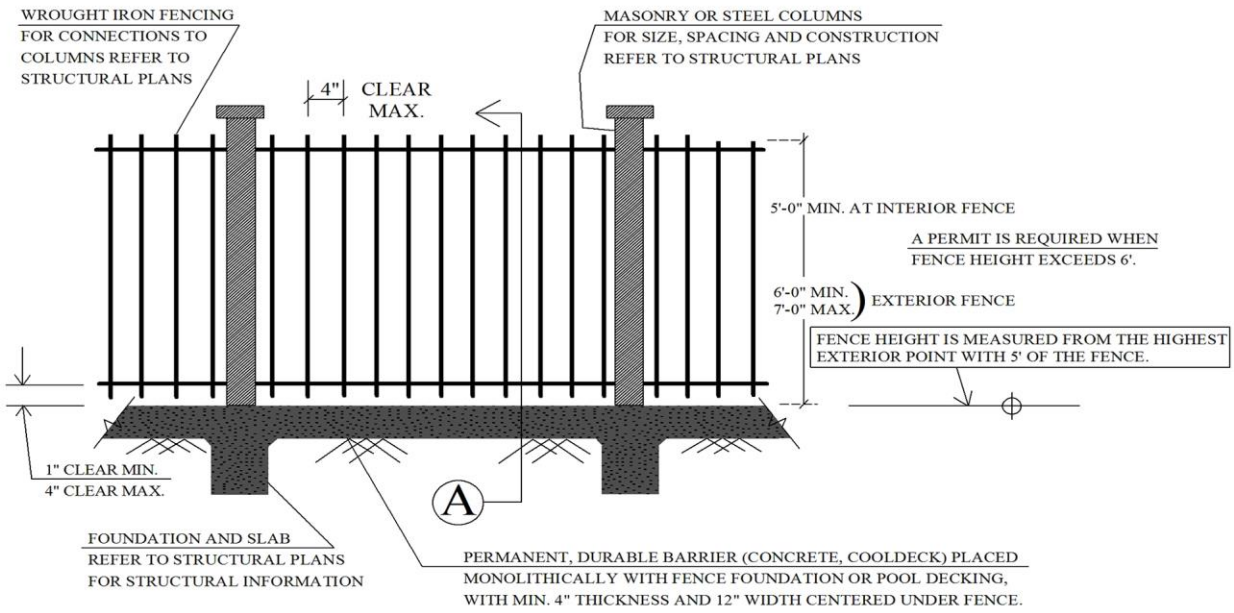
WROUGHT IRON FENCING
FOR CONNECTIONS TO
COLUMNS REFER TO
STRUCTURAL PLANS
MASONRY OR STEEL COLUMNS
FOR SIZE, SPACING AND CONSTRUCTION
REFER TO STRUCTURAL PLANS
4"
CLEAR
MAX.
5'-0" MIN. AT INTERIOR FENCE
A PERMIT IS REQUIRED WHEN
FENCE HEIGHT EXCEEDS 6'.
6'-0" MIN.
7'-0" MAX.
EXTERIOR FENCE
FENCE HEIGHT IS MEASURED FROM THE HIGHEST
EXTERIOR POINT WITH 5' OF THE FENCE.
1" CLEAR MIN.
4" CLEAR MAX.
A
FOUNDATION AND SLAB
REFER TO STRUCTURAL PLANS
FOR STRUCTURAL INFORMATION
PERMANENT, DURABLE BARRIER (CONCRETE, COOLDECK) PLACED
MONOLITHICALLY WITH FENCE FOUNDATION OR POOL DECKING,
WITH MIN. 4" THICKNESS AND 12" WIDTH CENTERED UNDER FENCE.

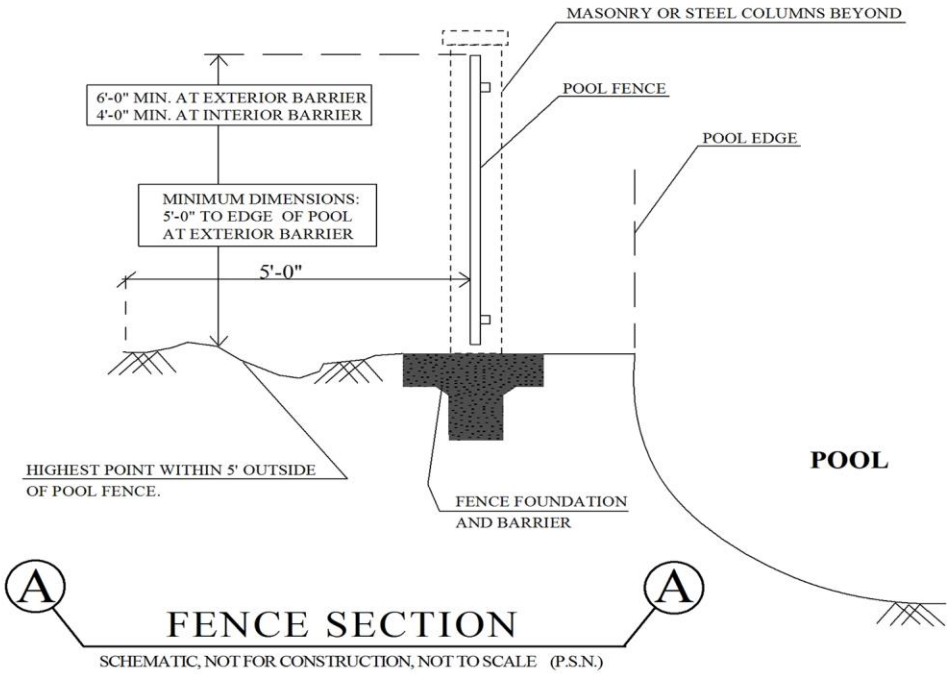
MASONRY OR STEEL COLUMNS BEYOND
POOL FENCE
POOL EDGE
6'-0" MIN. AT EXTERIOR BARRIER
4'-0" MIN. AT INTERIOR BARRIER
MINIMUM DIMENSIONS:
5'-0" TO EDGE OF POOL
AT EXTERIOR BARRIER
5'-0"
POOL
HIGHEST POINT WITHIN 5' OUTSIDE
OF POOL FENCE.
FENCE FOUNDATION
AND BARRIER
A
A
FENCE SECTION
SCHEMATIC, NOT FOR CONSTRUCTION, NOT TO SCALE (P.S.N.)

Graphic B

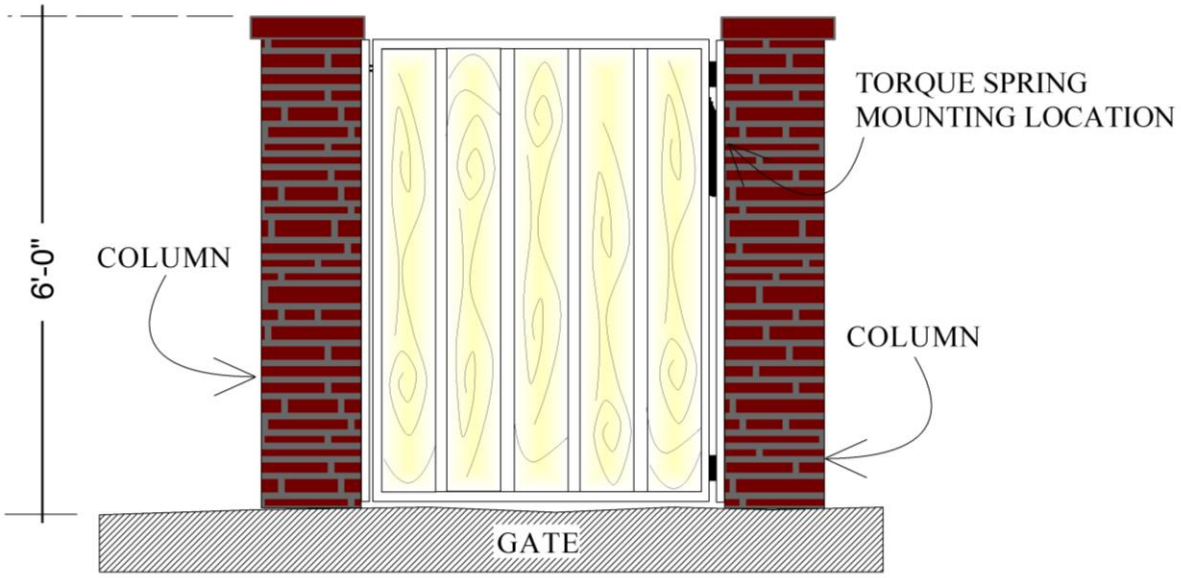
TORQUE SPRING
MOUNTING LOCATION
6'-0"
COLUMN
COLUMN
GATE

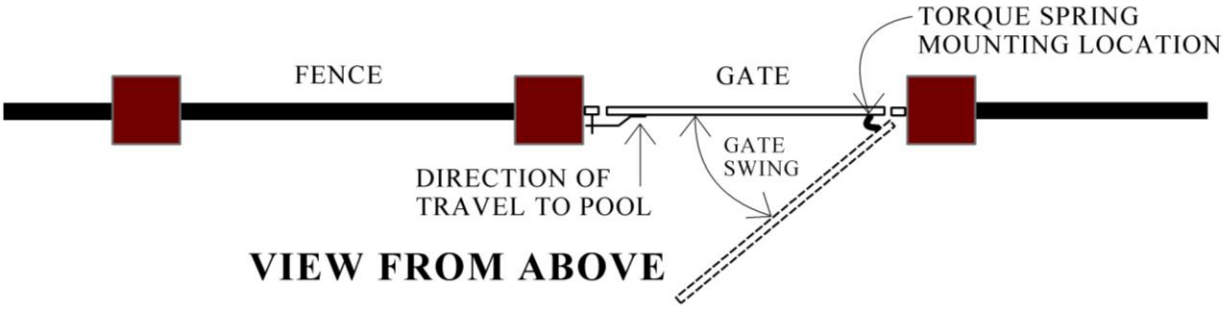
TORQUE SPRING
MOUNTING LOCATION
FENCE
GATE
GATE
SWING
DIRECTION OF
TRAVEL TO POOL
VIEW FROM ABOVE

Required Inspections

This section lists the minimum inspections required by the City of Chandler.

To schedule an inspection, call (480) 782-3100, or go to our inspection scheduling website at www.chandleraz.gov/clics at least one business day in advance of when the inspection is needed. An inspector will visit the property and leave written approval or a correction notice. The building inspector must approve all work before construction can proceed to the next level. All work to be inspected must be accessible and exposed.

Type of Inspection	Request Inspection When:
1. Footings	All forms, reinforcing steel and UFER ground are in place. An additional inspection is required for stems poured separately.
2. Monolithic footing	Reinforcing steel, UFER, forms and accessories are in place, but not covered.
3. Stem wall	Forms are aligned and staked, grade pins installed and reinforcing steel is in place.
4. Plumbing (groundwork)	The under-floor building drain is installed, shaded and under pressure test, but not covered.
5. Water piping (groundwork)	All under-floor water piping is installed, but not covered.
6. Building sewers (the sewer piping connecting the building with the private sewer or the public sewer)	Pipes are installed, shaded and properly supported, but not covered.
7. Water service (the water yard piping from the City water meter to the building)	Pipes are installed and under pressure, but not covered.
8. Upper level drainage	Tubs are filled to flood rim.
9. Strap and shear	All shear panels and mechanical fasteners are installed, but not covered.

Type of Inspection	Request Inspection When:
Note: inspections 10 through 13 are done concurrently.	
10. Rough electrical	All rough-in electrical is installed, but not covered
11. Rough plumbing	All rough-in plumbing is installed and under pressure test, but not covered.
12. Rough heating and ventilation	All rough-in mechanical work is installed, but not covered. (Groundwork – request inspection when ductwork is installed, but not covered).
13. Framing	The building is “dried in” and all framing members, gussets, shear panels, anchors and all plumbing, mechanical and electrical rough-ins are in place, but not covered.
Note: Inspections 14 and 15 are done concurrently.	
14. Wallboard	The wallboard is installed and nailed, but not filled or taped.
15. Lath inspection	All substrate wire mesh and trim are installed and ready to receive stucco, but not covered.
16. Electric (groundwork)	The conduit is installed, but not covered.
17. Final Inspection	The building is completed to the requirements of the approved plans, specification and the City of Chandler Codes.

Appendix A
Water Meter Worksheet

Fixture	Number	Value	Total
Water Closet (tank type)		x 2.2	
Shower Stall		x 1.4	
Bathtub (with/without overhead shower head)		x 1.4	
Lavatory		x 0.7	
Kitchen Sink		x 1.4	
Dishwasher		x 1.4	
Hose Bibs (count all)		x 2.5	
Laundry or Utility Sink		x 1.4	
Automatic Clothes Washer		x 1.4	
If you use a full bath group, do not count the individual fixtures.			
Full Bath Group (with/without shower head or shower stall)		x 3.6	
Half Bath Group (water closet and lavatory)		x 2.6	
Kitchen Group (dishwasher and sink with/without garbage grinder)		x 2.5	
Laundry Group (clothes washer standpipe and laundry tub)		x 2.5	
Total Fixture Units			

Total developed length of the water line from the water meter to the furthest water-using fixture unit. (**Note:** this is usually the hose bib at the rear of the home).

Total distance: _____ feet

Indicate the size of the existing water meter and supply size. NOTE: The minimum water meter size for new construction is 1 inch.

Meter size _____

Supply size _____

Note: for a room addition, please include both the existing and new on this sheet.

Appendix B
Electrical Load Calculation Worksheet

OPTIONAL CALCULATION – EXISTING DWELLING UNIT. NEC SECTION 220.83/IRC E3602.2.

For a dwelling unit having the total connected load served by a single 3-wire, 120/240 volt set of service entrance or feeder conductors with an ampacity of 100 or greater.

LIVABLE SQUARE FOOTAGE _____ SF @ 3= _____ VA

SMALL APPLIANCE CIRCUITS (2 minimum) _____@ 1500 = _____

LAUNDRY CIRCUIT (Required in new dwelling: 1500) = _____

ELECTRIC DRYER (Nameplate rating or 5,000) = _____

ELECTRIC RANGE (Nameplate rating or 12,000) = _____

COOKTOP & OVEN (Nameplate rating or 6,000 each) = _____

MICROWAVE OVEN (Dedicated circuit: 1200) = _____

DISHWASHER (W or W/) Disposer on circuit: 1500) = _____

DISPOSER (Separate dedicated circuit: 720)= _____

ELECTRIC WATER HEATER (Nameplate or 4,500) = _____

OTHER _____ _____

SUBTOTAL = _____ VA

FIRST 10 KVA @100% = 10,000

REMAINDER @ 40% = _____

SUBTOTAL = _____ VA

DIVIDED BY 240 V = _____AMPS

AIR CONDITIONING = _____AMPS

POOL PUMP = _____AMPS

TOTAL = _____AMPS

REQUIRED SERVICE _____AMPS

Appendix C

Building Permit Application

Chandler • Arizona Where Values Make The Difference **Building Permit Application**	STAMP	**City Permit No.**

Date	Applicant/Applicant's Representative *(contact for questions, plan pickup, etc.)*	Phone Number
E-Mail Address (Optional)	Trust Account: ☐ Yes ☐ No	Trust Account Number

Permit Type:	Commercial: ☐ Site Plan ☐ Tenant Improvement	Residential: ☐ Custom ☐ Remodel	☐ Standard Plan No.: _____ Elevation: _____	Other: ☐ Pool/Spa ☐ Gas/Elect ☐ Water Meter

Project Address	City, State, Zip
Project Name	
Description of work to be performed	

Construction Area S.F.	Pool S.F. *(pool permit)*	Type of Construction *(e.g. I, II, III, IV, V)*	No. of Stories	Occupancy Class
Assessor's Parcel No.	Subdivision/Shopping Center Name			Lot No.

Property Owner Name	Phone Number	Fax Number
Mailing Address	City, State, Zip Code	

Contractor Name (*Please Sign Below*)	City Sales Tax No.	Phone Number	Fax Number
Mailing Address		City, State, Zip Code	

Water Meter is: ☐ New ☐ Inside City Limits ☐ Existing ☐ Outside City Limits	Domestic Meter Size	Landscape Meter Size	Service Line Size
Name		Phone Number	
Billing Address		City, State, Zip Code	

Applicant/Applicant's Representative/Owner's Signature	Date	Total Construction Valuation *(bid price, if applicable)*:

I am Currently a Licensed Contractor: (*This section must be filled out by contractor or have a qualifying exemption*)

Name: _____ Signature: _____ Date: _____	Falsification of information on this document for the purpose of evading State Licensing laws is a Class II misdemeanor pursuant to A.R.S. State Statutes 13-2704. ***See back of this form for state statue regarding contractor licensure and exemptions.***	ROC License #: _____ License Class: _____ ☐ I am claiming an Exemption (*See back*)

Mailing Address:
P.O. Box 4008, MS 406
Chandler, Arizona 85244-4008

Transportation and Development Department
Development Services Division
215 E. Buffalo St., Chandler Arizona 85225

Telephone: (480) 782-3000
Fax: (480) 782-3055
www.chandleraz.gov
Form No: UDM-075/Building
Rev: 6-17-11

EXEMPTION FROM LICENSING

I am exempt from Arizona contractors' license laws on the basis of the license exemptions contained in Arizona Revised Statutes 32-1121A., as marked below.

A.R.S. State Statute 32-1121; Persons not required to be licensed; Penalties.

☐ 32-1121A.5 Owners of property who improve such property or who build or improve structures or appurtenances on such property and who do the work themselves, with their own employees or with duly licensed contractors, if the structure, group of structures of appurtenances, including the improvements thereto, are intended for occupancy solely by the owner and are not intended for occupancy by members of the public as the owner's employees of business visitors and the structures of appurtenances are not intended for sale or for rent. In all actions brought under this chapter, proof of the sale or rent or the offering for sale or rent of any such structure by the owner-builder within one year after completion or issuance of a certificate of occupancy is prima facie evidence that such project was undertaken for the purpose of sale or rent. For the purposes of this paragraph, "sale" or 'rent' includes any arrangement by which the owner receives compensation in money, provisions, chattels or labor from the occupancy of the transfer or the property or the structures on the property.

☐ 32-1121A.6 Owners of the property who are acting as developers and who build structures of appurtenances to structure on their property for the purpose of sale or rent and who contract for such a project with a general contractor licensed pursuant to this chapter and owners of property who are acting as developers, who improve structures or appurtenances to structures on their property for the purpose of sale or rent and who contract for such a project with a general contractor or specialty contractors licensed pursuant to this chapter. To qualify for the exemption under this paragraph, the licensed contractors' names and license numbers shall be included in all sales documents.

☐ 32-1121A.14 Any person other that a licensed contractor engaging in any work or operation on one undertaking or project by one or more contracts, for which the aggregate contract price, including labor, materials and all other items, but excluding any electrical fixture or appliance that was designed by the manufacturer, that is unaltered, unchanged or unmodified by any person, that can be plugged into a common household electrical outlet utilizing a two pronged or three pronged electrical connector and that does not use any other form of energy, including natural gas, propane or other petroleum or gaseous fuel, to operate or is attached by a nail, screw or other fastening device to the frame or foundation of any residential structure, is less than one thousand dollars. The work or operations which are exempt under this paragraph shall be of a casual or minor nature.

This exemption does not apply:

(a) In any case in which the performance of the work requires a local building permit.
(b) In any case in which the work or construction is only a part of a larger or major operation, whether undertaken by the same or a different contractor, or in which a division of the operation is made in contracts of amounts less than one thousand dollars, excluding any electrical fixture or appliance that was designed by the manufacturer, that is unaltered, unchanged or unmodified by any person, that can be plugged into a common household electrical outlet utilizing a two pronged or three pronged electrical connector and that does not use any other form of energy, including natural gas, propane or other petroleum or gaseous fuel, to operate or is attached by a nail, screw or other fastening device to the frame or foundation of any residential structure, for the purpose of evasion of this chapter or otherwise.
(c) To a person who utilizes any form of advertising to the public in which the person's unlicensed status is not disclosed by including the words "not a licensed contractor" in the advertisement.

will be using the following licensed contractors on this project:

General Contractor _____ License No. ROC _____ Class _____

Mechanical Contractor _____ License No. ROC _____ Class _____

Electrical Contractor _____ License No. ROC _____ Class _____

Plumbing Contractor _____ License No. ROC _____ Class _____

Other Contractor _____ License No. ROC _____ Class _____

Applicant/Owner Signature_____ Date_____

Transportation and Development Department

Form No: UDM-075/Building
Rev: 6-17-11
Page No. 2

Mayor Jay Tibshraeny and the Chandler City Council